ECOSYS P2335d
ECOSYS P2335dn
ECOSYS P2335dw
PF-1100

SERVICE
MANUAL

Published in Febuary 2018
Rev.1

CAUTION

RISK OF EXPLOSION IF BATTERY IS REPLACED BY AN INCORRECT TYPE. DISPOSE OF USED BATTERIES ACCORDING TO THE INSTRUCTIONS.

It may be illegal to dispose of this battery into the municipal waste stream. Check with your local solid waste officials for details in your area for proper disposal.

ATTENTION

IL Y A UN RISQUE D’EXPLOSION SI LA BATTERIE EST REMPLACEE PAR UN MODELE DE TYPE INCORRECT. METTRE AU REBUT LES BATTERIES UTILISEES SELON LES INSTRUCTIONS DONNEES.

Il peut être illégal de jeter les batteries dans des eaux d’égout municipales. Vérifiez avec les fonctionnaires municipaux de votre région pour les détails concernant des déchets solides et une mise au rebut appropriée.

Notation of products in the manual

For the purpose of this service manual, products are identified by print speed.

Product name	Manual classification			
ECOSYS P2335d	35 ppm	LED	-	-
ECOSYS P2335dn			Network	-
ECOSYS P2335dw			Network	Wi-Fi

Revision history

Revision	Date	Pages	Revised contents
1	9 January 2018	4-73	Added: Precaution when detach the PWB
		6-8 to 10	Added: Description of Date and Time
		8-5	Correction: Pin assignment of YC19

This page is intentionally left blank.

Safety precautions

This booklet provides safety warnings and precautions for our service personnel to ensure the safety of their customers, their machines as well as themselves during maintenance activities. Service personnel are advised to read this booklet carefully to familiarize themselves with the warnings and precautions described here before engaging in maintenance activities.

Safety warnings and precautions

Various symbols are used to protect our service personnel and customers from physical danger and to prevent damage to their property. These symbols are described below:

⚠ **DANGER:** High risk of serious bodily injury or death may result from insufficient attention to or incorrect compliance with warning messages using this symbol.

⚠ **WARNING:** Serious bodily injury or death may result from insufficient attention to or incorrect compliance with warning messages using this symbol.

⚠ **CAUTION:** Bodily injury or damage to property may result from insufficient attention to or incorrect compliance with warning messages using this symbol.

Symbols

The triangle (△) symbol indicates a warning including danger and caution. The specific point of attention is shown inside the symbol.

 General warning.  Warning of risk of electric shock.

 Warning of high temperature.

⃠ indicates a prohibited action. The specific prohibition is shown inside the symbol.

 General prohibited action.  Disassembly prohibited.

● indicates that action is required. The specific action required is shown inside the symbol.

 General action required.  Remove the power plug from the wall outlet.

 Always ground the copier.

1. Installation Precautions

⚠ WARNING

- Do not use a power supply with a voltage other than that specified. Avoid multiple connections to one outlet: they may cause fire or electric shock. When using an extension cable, always check that it is adequate for the rated current. .....
- Connect the ground wire to a suitable grounding point. Not grounding the copier may cause fire or electric shock. Connecting the earth wire to an object not approved for the purpose may cause explosion or electric shock. Never connect the ground cable to any of the following: gas pipes, lightning rods, ground cables for telephone lines and water pipes or faucets not approved by the proper authorities. .....

⚠ CAUTION:

- Do not place the copier on an infirm or angled surface: the copier may tip over, causing injury. .....
- Do not install the copier in a humid or dusty place. This may cause fire or electric shock. .....
- Do not install the copier near a radiator, heater, other heat source or near flammable material. This may cause fire. .....
- Allow sufficient space around the copier to allow the ventilation grills to keep the machine as cool as possible. Insufficient ventilation may cause heat buildup and poor copying performance. .....
- Always handle the machine by the correct locations when moving it. .....
- Always use anti-toppling and locking devices on copiers so equipped. Failure to do this may cause the copier to move unexpectedly or topple, leading to injury. .....
- Avoid inhaling toner or developer excessively. Protect the eyes. If toner or developer is accidentally ingested, drink a lot of water to dilute it in the stomach and obtain medical attention immediately. If it gets into the eyes, rinse immediately with copious amounts of water and obtain medical attention. .....
- Advice customers that they must always follow the safety warnings and precautions in the copier's instruction handbook. .....

2. Precautions for Maintenance

WARNING

- Always remove the power plug from the wall outlet before starting machine disassembly. .....
- Always follow the procedures for maintenance described in the service manual and other related brochures. .....
- Under no circumstances attempt to bypass or disable safety features including safety mechanisms and protective circuits. .....
- Always use parts having the correct specifications. .....
- Always use the thermostat or thermal fuse specified in the service manual or other related brochure when replacing them. Using a piece of wire, for example, could lead to fire or other serious accident. .....
- When the service manual or other serious brochure specifies a distance or gap for installation of a part, always use the correct scale and measure carefully. .....
- Always check that the copier is correctly connected to an outlet with a ground connection. .....
- Check that the power cable covering is free of damage. Check that the power plug is dust-free. If it is dirty, clean it to remove the risk of fire or electric shock. .....
- Never attempt to disassemble the optical unit in machines using lasers. Leaking laser light may damage eyesight. .....
- Handle the charger sections with care. They are charged to high potentials and may cause electric shock if handled improperly. .....

CAUTION

- Wear safe clothing. If wearing loose clothing or accessories such as ties, make sure they are safely secured so they will not be caught in rotating sections. .....
- Use utmost caution when working on a powered machine. Keep away from chains and belts. .....
- Handle the fixing section with care to avoid burns as it can be extremely hot. .....
- Check that the fixing unit thermistor, heat and press rollers are clean. Dirt on them can cause abnormally high temperatures. .....

- Do not remove the ozone filter, if any, from the copier except for routine replacement. .....
- Do not pull on the AC power cord or connector wires on high-voltage components when removing them; always hold the plug itself. .....
- Do not route the power cable where it may be stood on or trapped. If necessary, protect it with a cable cover or other appropriate item. .....
- Treat the ends of the wire carefully when installing a new charger wire to avoid electric leaks. .....
- Remove toner completely from electronic components. .....
- Run wire harnesses carefully so that wires will not be trapped or damaged. .....
- After maintenance, always check that all the parts, screws, connectors and wires that were removed, have been refitted correctly. Special attention should be paid to any forgotten connector, trapped wire and missing screws. .....
- Check that all the caution labels that should be present on the machine according to the instruction handbook are clean and not peeling. Replace with new ones if necessary. .....
- Handle greases and solvents with care by following the instructions below: .....
  · Use only a small amount of solvent at a time, being careful not to spill. Wipe spills off completely.
  · Ventilate the room well while using grease or solvents.
  · Allow applied solvents to evaporate completely before refitting the covers or turning the power switch on.
  · Always wash hands afterwards.
- Never dispose of toner or toner bottles in fire. Toner may cause sparks when exposed directly to fire in a furnace, etc. .....
- Should smoke be seen coming from the copier, remove the power plug from the wall outlet immediately. .....

3. Miscellaneous

WARNING

- Never attempt to heat the drum or expose it to any organic solvents such as alcohol, other than the specified refiner; it may generate toxic gas. .....
- Keep the machine away from flammable liquids, gases, and aerosols. A fire or an electric shock might occur. .....

This page is intentionally left blank.

CONTENTS

4 Maintenance

8 PWBs

9 Appendixes

Installation Guide

1 Specifications
1-1 Specifications

(1) Common function

Item		Description		
		P2335dw	P2335dn	P2335d
Type		Desktop		
Printing Method		Electrophotography by semiconductor laser		
Paper Weight	**Cassette**	60 to 163 g/m^2		
	Multi Purpose Tray	60 to 220 g/m², 209g/m² (Hagaki)		
Paper Type	**Cassette**	Plain, Rough, Recycled, Preprinted, Bond, Color, Prepunched, Letterhead, Thick, High Quality, Custom 1 to 8 (Duplex: Same as Simplex)		
	Multi Purpose Tray	Plain, Transparency (OHP film), Rough, Vellum, Labels, Recycled, Preprinted, Cardstock, Coated, Color, Prepunched, Letterhead, Envelope, Thick, High Quality, Custom 1 to 8		
Paper Size	**Cassette**	A4, A5-R, A5, A6, B5, Letter, Legal, Folio, 216 × 340 mm, Statement, Executive, Oficio II, 16K, B5(ISO), Custom (105 x 148 to 216 x 356 mm)		
	Multi Purpose Tray	A4, A5-R, A5, A6, B5, B6, Letter, Legal, Folio, 216 × 340 mm, Statement-R,Executive, Oficio II, 16K, B5(ISO), Envelope #10, Envelope #9, Envelope #6 3/4, Envelope Monarch, Envelope DL, Envelope C5, Hagaki (Cardstock), Oufukuhagaki (Return postcard), youkei 4, youkei 2, Custom (70 x 148 to 216 x 356 mm)		
Printable Area		Print margin for top, bottom and both sides is 4.2 mm.		
Warm-up Time (23°C/ 73.4°F, 60%)	**Power on**	15 seconds or less		
	Sleep	10 seconds or less		
Paper Capacity	**Cassette**	300 Sheets (64 g/m²)*1 250 Sheets (80 g/m²) *1		
	Multi Purpose Tray	120 sheets (A4/Letter or smaller) (64 g/m²) 100 sheets (A4/Letter or smaller) (80 g/m²)		
Output Tray Capacity	**Inner tray**	250 sheets (80 g/m²)		
Image Write System		Semiconductor laser and electrophotography (twin beams)		
Photoconductor		OPC drum (diameter 30 mm)		
Charging system		Positive charge scorotron system		
Developer system		Magnetic mono-component developing system Toner: magnetic toner Toner feed system: leveled toner feed		
Transfer system		Transfer roller method		
Separation system		Curvature separation + discharger needle (grounded)		

Item		Description		
		P2335dw	P2335dn	P2335d
Cleaning system		Counter blade		
Charge erasing system		Exposure by cleaning lamp (LED)		
Fusing system		Sliding belt + foam press roller system Heat source: halogen heater Abnormal temperature preventing device: 2 thermocat		
Operation Panel		LED		
Memory		512 MB		
Interface		USB Interface Connector: 1 (Hi-Speed USB) USB Port: 1 (Hi-Speed USB)		
	Network	Network interface: 1 (10 BASE-T/100 BASE-TX/1000 BASE-T)		-
	Wireless LAN	Wireless LAN	-	
Operating Environment	**Temperature**	10 to 32.5°C/50 to 90.5°F		
	Humidity	10 to 80%		
	Altitude	3,500 m/11,482 ft maximum		
	Brightness	1,500 lux maximum		
Dimension (W × D × H)		14.77" × 15.48" × 10.71" 375 × 393 × 272 mm		
Weight		(without toner container) Approx. 30.9 lb/Approx. 14 kg		
Space Required (W × D)		(Using multi purpose tray) 14.77" × 28.47" 375 × 723 mm		
Power Source		AC220 to 240V, 50 Hz, 4.2A		

*1 Up to upper limit height line in the cassette.

(2) Printer Functions

Item	Description		
	P2335dw	P2335dn	P2335d
Printing Speed	A4/A5 35 sheets/min Letter 37 sheets/min Legal 30 sheets/min B5 24 sheets/min *1 A5-R 17 sheets/min *1 A6 17 sheets/min *1 16K 20 sheets/min *1		
First Print Time (A4, feed from Cassette)	6.8 seconds or less		
Resolution	300 dpi × 300 dpi, 600 dpi × 600 dpi, 1200 dpi equivalent × 1200 dpi equivalent, 1800 dpi equivalent × 600 dpi		
Operating System	Windows XP, Windows Server 2003, Windows Vista, Windows 7, Windows 8, Windows 8.1, Windows 10, Windows Server 2008/R2, Windows Server 2012/R2, Mac OS X v10.5 or later		
Interface	USB Interface Connector: 1 (Hi-Speed USB)		
	Network interface: 1 (10 BASE-T/100 BASE-TX/1000 BASE-T)		-
Wireless LAN	Wireless LAN	-	
Page Description Language	PRESCRIBE		
Emulations	PCL6(PCL-XL, PCL5e), KPDL3 (PostScript3 compatible), PDF, XPS/OpenXPS		

*1: It will be 10 ppm after the seventh sheet (depending on media, size, usage situation)

(3) Paper Feeder (PF-1100)(Option)

Item	Description
Paper Supply Method	Friction roller feeder (No. Sheets: 250, 80 g/m2, 1 cassette)
Paper Size	A4, A5-R, A5, B5, A6, Letter, Legal, Folio, 216 × 340 mm, Statement, Executive, Oficio II, 16K, B5(ISO), Custom (105 x 148 to 216 x 356 mm)
Supported Paper	Paper weight: 60 to 163 g/m² Media types: Plain, Recycled, Material
Dimensions (W) × (D) × (H)	14.77" × 15.48" × 3.94" 375 × 393 × 100 mm
Weight	Approx. 6.4 lb/Approx. 2.9 kg

1-2 Part Names

(1) Machine Exterior

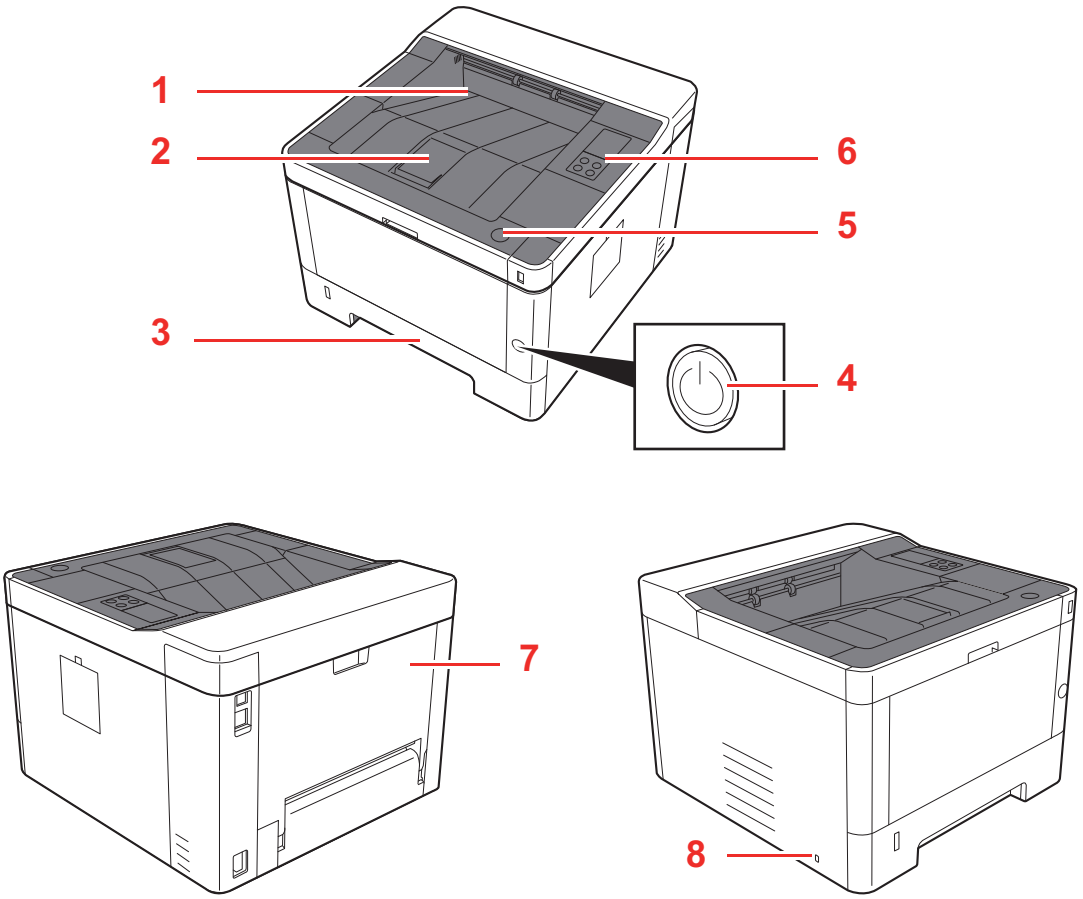

1 Top Tray
2 Eject Stopper
3 Cassette 1
4 Power Switch
5 Front Cover Open Button
6 Operation Panel
7 Rear cover
8 Anti-theft Lock Slot

(2) Connectors/Interior

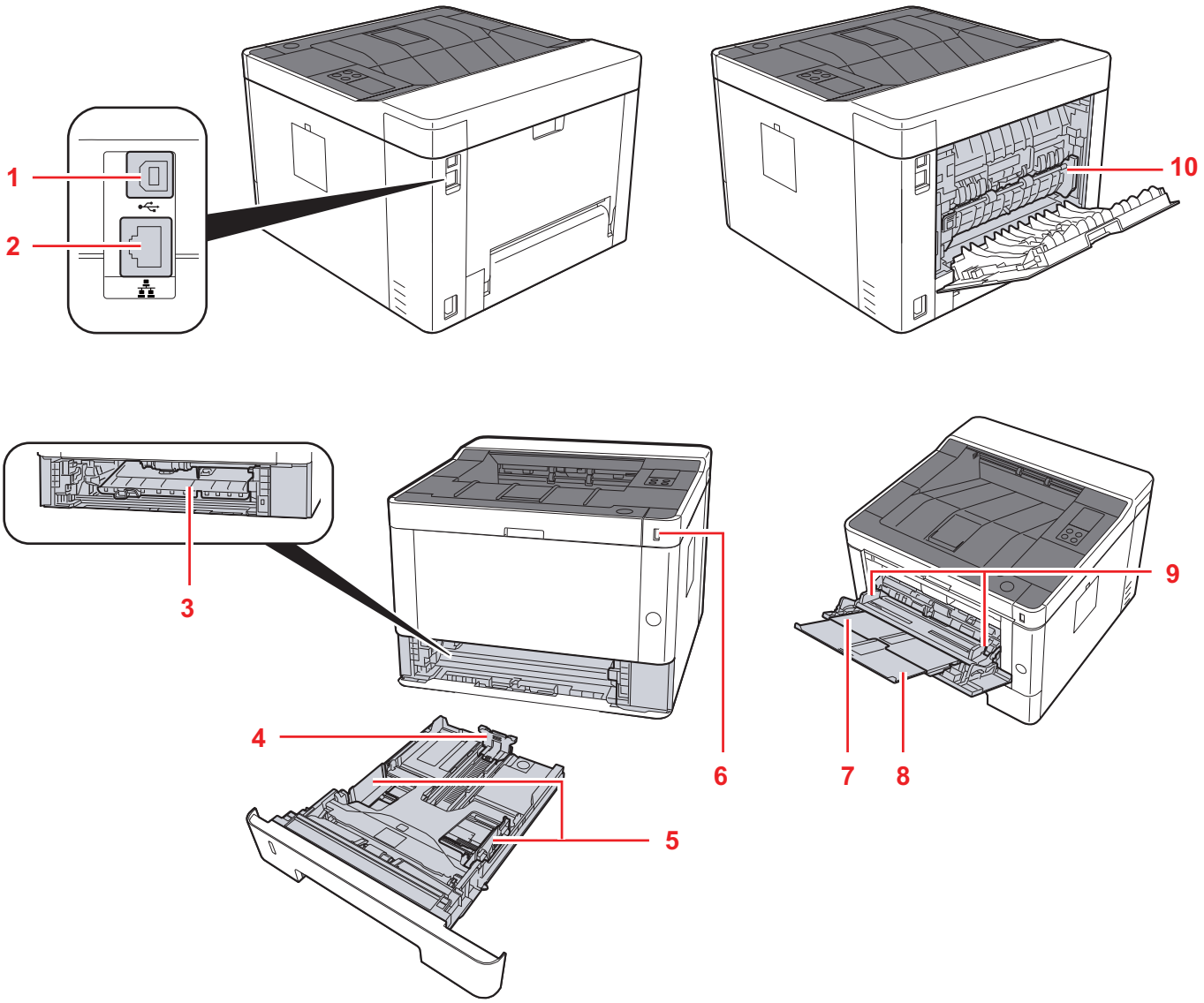

1. USB Interface Connector
2. Network Interface Connector
3. Feed Cover
4. Paper Length Guide
5. Paper Width Guides
6. USB Memory Slot
7. Multi Purpose Tray
8. Sub Tray
9. Paper Guides
10. Fuser Cover

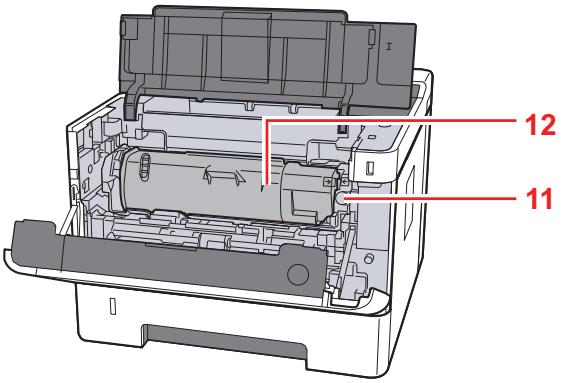

11. Toner Container Release Button
12. Toner Container

(3) With Optional Equipments Attached

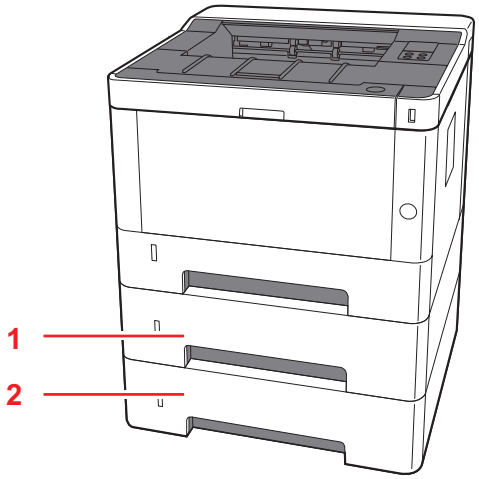

1. Cassette 2
2. Cassette 3

(4) Operation Panel Keys

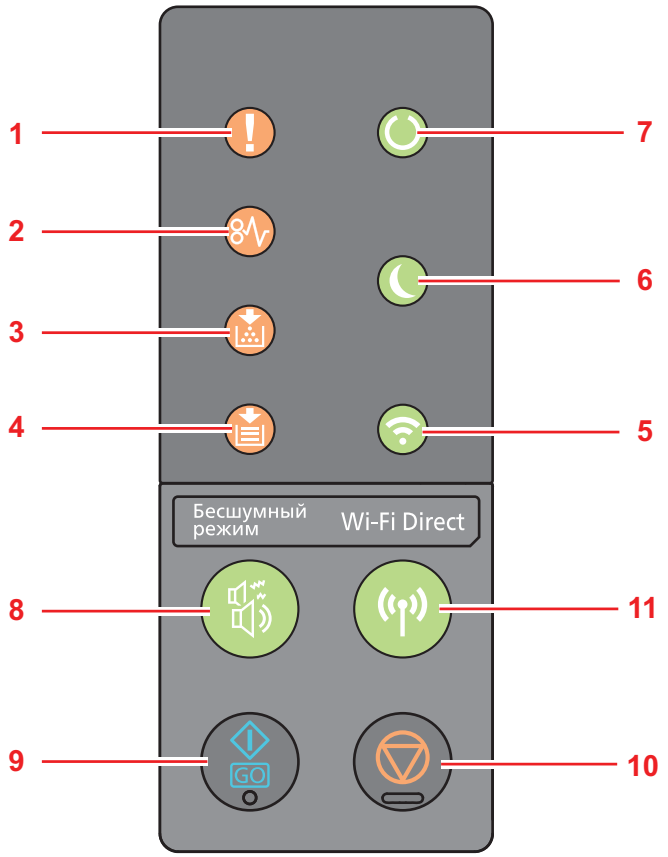

1. [Attention] indicator: (Lit/Flashing) An error has occurred.
2. [JAM] indicator: (Lit) A paper jam has occurred.
3. [Toner] indicator: (Lit) Toner is empty. (Flashing) The toner is running low.
4. [Paper] indicator: (Lit) The paper has run out when printing. (Flashing) The specified cassette or paper feeder has no paper at Ready status.
5. [Wi-Fi] indicator*1: (Lit) The machine is connected to Wi-Fi.
6. [Energy Saver] indicator: (Lit) The printer is in sleep mode.
7. [Processing] indicator: (Lit) Indicates online status (printing is possible). (Flashing) The printer is receiving data.
8. [Quiet Mode] key: Lower print and scan speed for quiet processing.
9. [Go] key: Clears a specific error, and wakes the machine from the sleep state.
10. [Cancel] key: Pauses a job. Press for 1 second to cancel a job.
11. [Wi-Fi Direct] key*1: Turns Wi-Fi Direct ON or OFF.

*1: Wi-Fi model only

1-3 Overview of Optional Equipment

The following optional equipment is available for the machine.

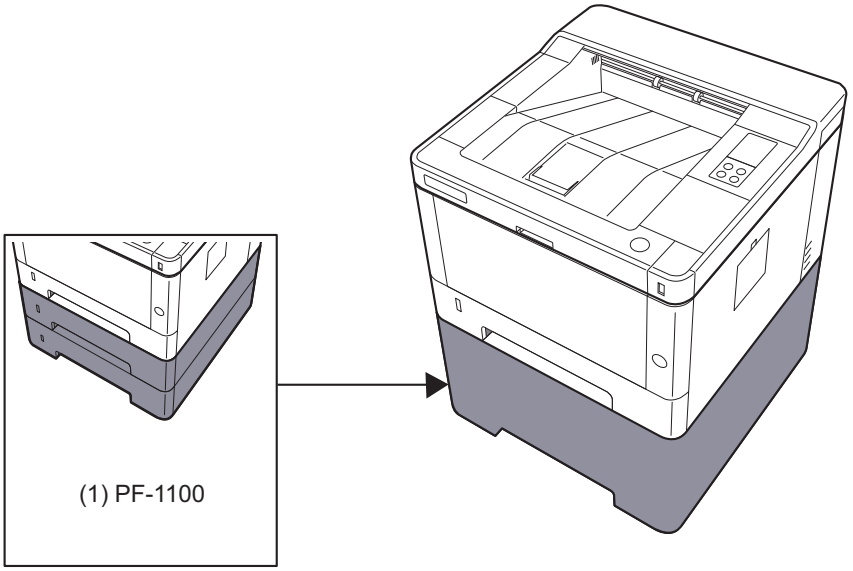

Software option
(2) UG-33

(3) SD/SDHC Memory Card

(1) PF-1100 "Paper Feeder"

Maximum two 250-sheet paper feeder can be installed.

(2) UG-33 "ThinPrint"

This application allows print data to be printed directly without a print driver.

(3) SD/SDHC "Memory Card"

SD/SDHC memory card is a micro chip card that can save optional fonts, macros, forms.
The machine is equipped with a slot for an SDHC memory card with a maximum size of 32 GB, and an SD memory card with a maximum size of 2 GB.

Reading the SD/SDHC Memory Card

Once inserted in the machine's slot, the contents of the can be read from the operation panel or automatically when you power on or reset the machine.

Installing and Formatting the SD/SDHC Memory Card

To use an unused SD/SDHC memory card, you must first use the machine to format the SD/SDHC memory card.

Installing the Memory Modules

1. Turn off the machine and disconnect the power cord and interface cable.
2. Remove the cover.

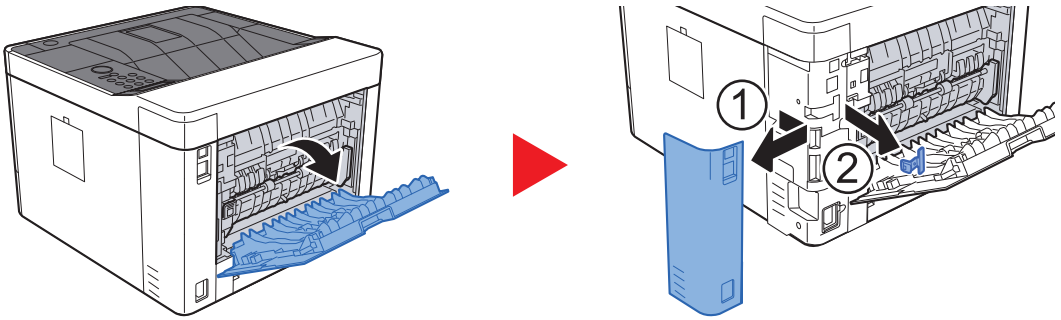

3. Insert the SD/SDHC memory card into the SD/SDHC memory card slot.

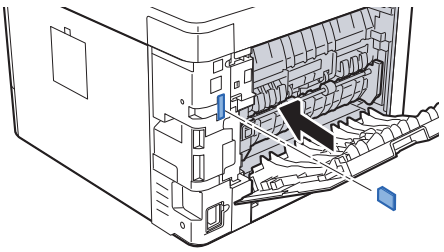

4. Replace the covers.

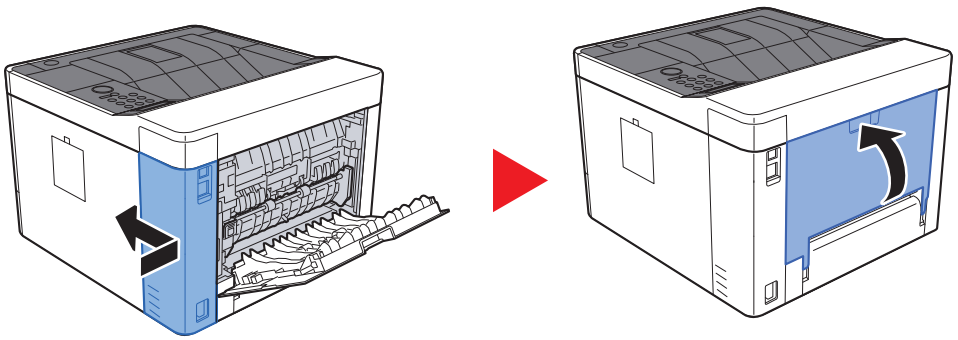

2 Installation
2-1 Environment

Installation environment

1. Temperature: 50 to 90.5°F (10 to 32.5°C) (But humidity should be 70% or less when the temperature is 90.5°F (32.5°C).)
2. Humidity: 10 to 80%(But the temperature should be 86°F (30°C) or less when humidity is 80%.)
3. Power AC220 to 240V 50HzA 4.2A or more
4. Frequency fluctuation: 50Hz+/-2% or 60Hz+/-2%

Installation location

The operative environmental conditions are as follows:

Adverse environmental conditions may affect the image quality. It is recommended to use the machine as follows:
Humidity: 36 to 65% Temperature: 60.8 to 80.6°F or less (16 to 27°C).
Avoid the following locations when selecting a site for the machine.

Avoid locations near a window or with exposure to direct sunlight
Avoid locations with vibrations
Avoid locations with rapid temperature fluctuations
Avoid locations with direct exposure to hot or cold air
Avoid poorly ventilated locations

If the floor is delicate, when this machine is moved after installation, the floor material may be damaged by the casters.
During operation, some ozone is released, but the amount does not cause any ill effect to one's health.
However, when using for a prolonged time in a poorly ventilated room or when printing large number of copies, it may become unpleasant with smell. To maintain the appropriate environment for copy work, it is suggested that the room be properly ventilated.

Installation space

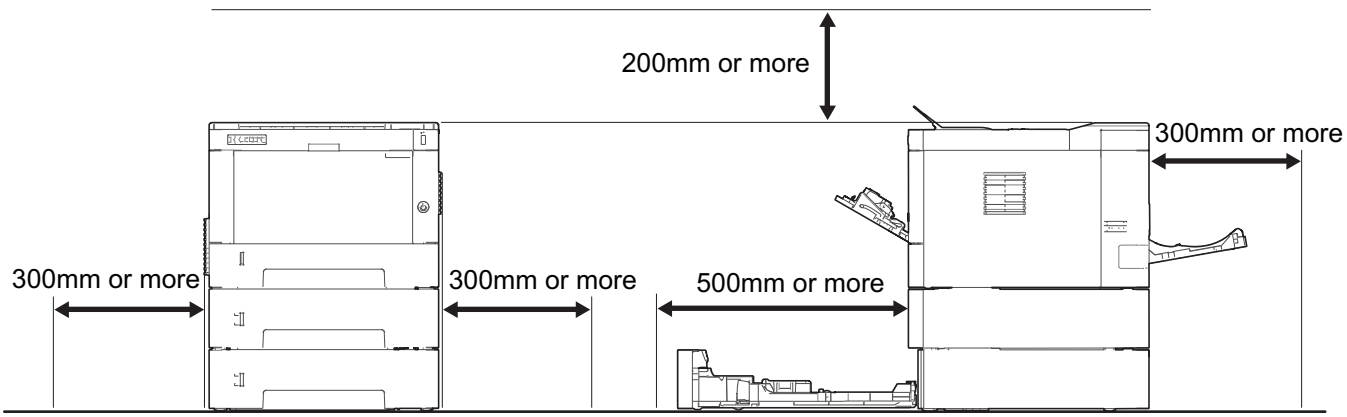

2-2 Installing the main unit

Installation procedures

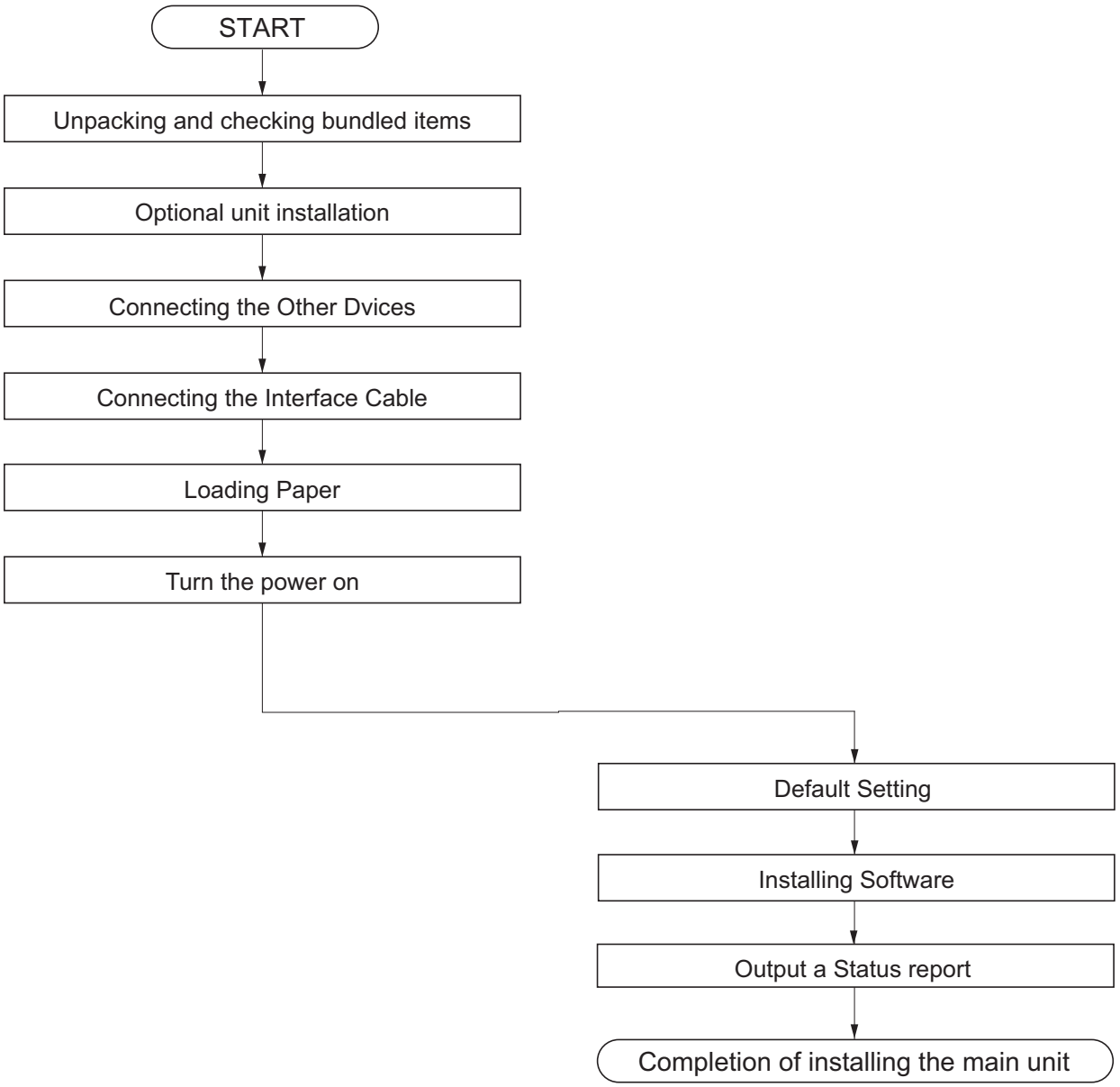

IMPORTANT
Default setting will take about 10 minutes for the toner installation.

(1) Unpacking and checking bundled items

(1-1) Main unit

Take out the main unit and accessories from the packing case.
Remove the tape and cushioning materials for packing from the main unit.

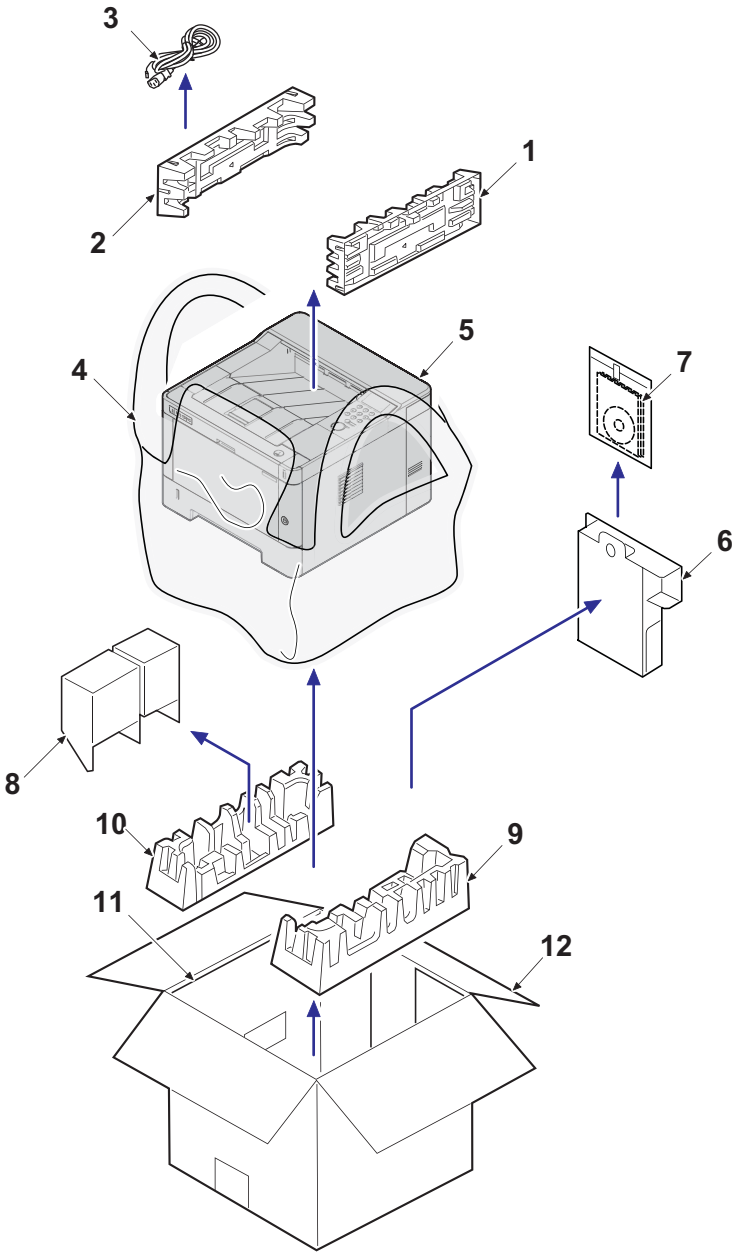

1. Right upper pad
2. Left upper pad
3. AC power cord
4. Product storage bag
5. Main unit
6. Accessories box
7. Documents
8. Left bottom pad
9. Lower right pad
10. Lower left pad
11. inner frame
12. Outer box

Note: Make sure to install the main unit on a level surface.

(1-2) Paper Feeder (Option)

Take the paper feeder out of the packing case.
Remove the packing tape from the paper feeder.

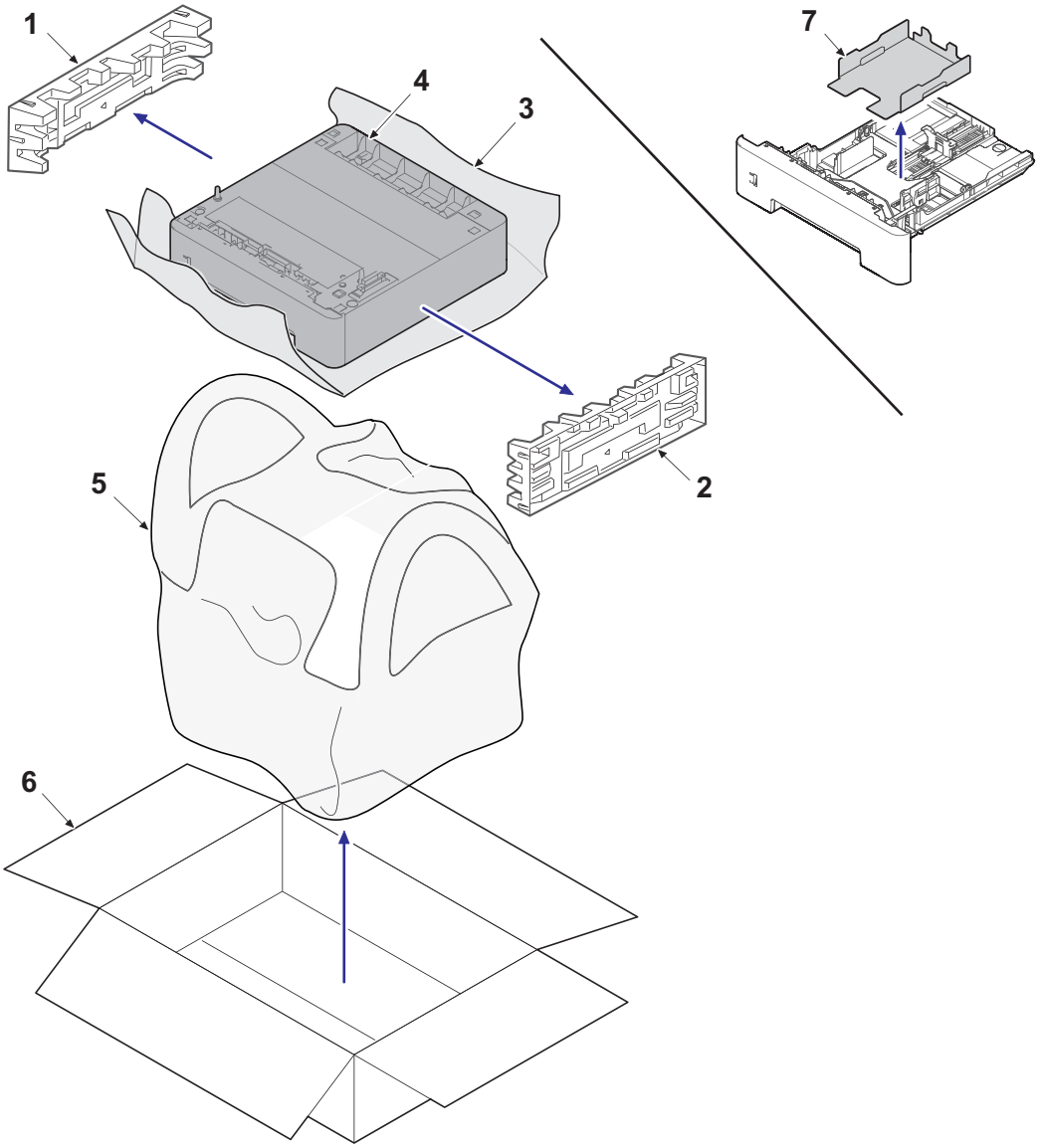

1. Left pad
2. Right pad
3. Main unit protective sheet
4. Paper Feeder
5. Main unit storage bag
6. Outer box
7. Cassette spacer

(2) Installing the optional equipment

Install the necessary optional equipment in the main unit by referring to the installation procedures.

(3) Connecting to other device

Prepare the cables necessary to suit the environment and purpose of the machine use.

When Connecting the Machine to the PC via USB

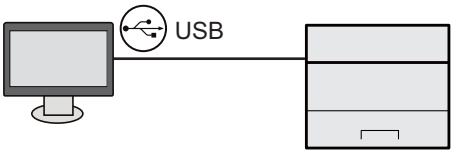

When connecting the main unit, PC and Tablet with the network cable, Wi-Fi*1 or Wi-Fi Direct*1,

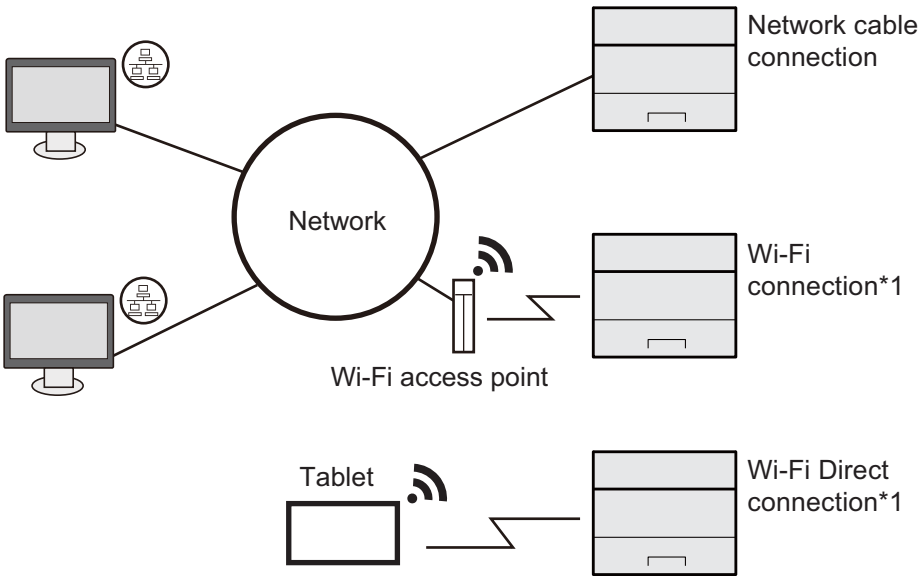

*1: Wi-Fi model only

NOTE
When using wireless LAN, it is not necessary to connect the network cable. It is necessary to change the initial setting of the machine unit from System Menu to use the wireless LAN.

Cables that Can Be Used

Connection environment	Function	Necessary Cable
Connect a LAN cable to the machine.	Printer	LAN Cable (10BASE-T, 100BASE-TX, 1000BASE-T)
Connect a USB cable to the machine.	Printer	USB2.0 compatible cable (Hi-Speed USB conformity, Max. 5.0m or less. with shield)

IMPORTANT
When not using the USB2.0 compatible cable, it causes a failure.

(4) Connecting to the cable

(4-1) LAN Cable

1. Connect the LAN cable to the network interface connector.
2. Connect the other end of the cable to the hub or the PC.
3. Power on the machine and set the network.

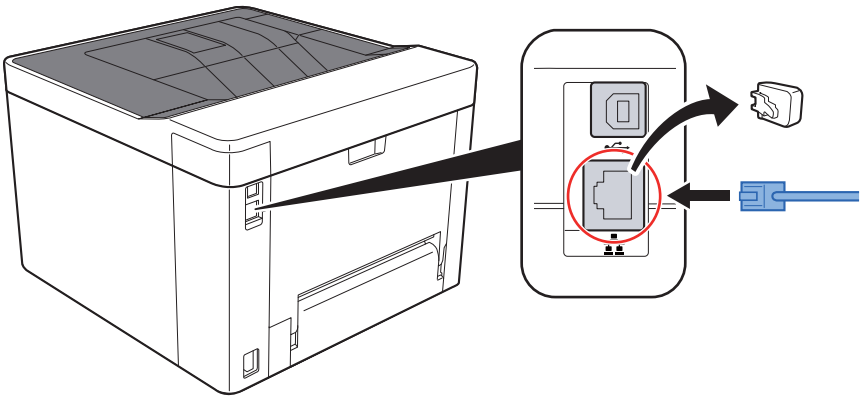

(4-2)USB cable

1. Connect the USB cable to the USB interface connector.
2. Connect the other end of the cable to the PC.
3. Turn the power switch of the main unit on.

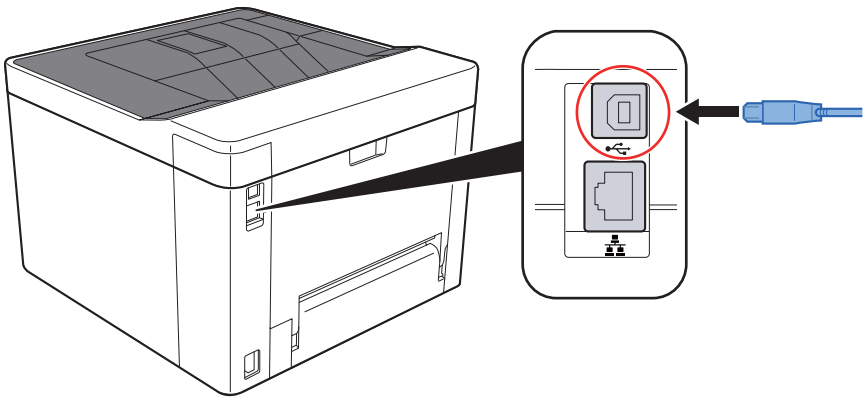

(5) Loading Paper

1. Pull the cassette out of the main unit.

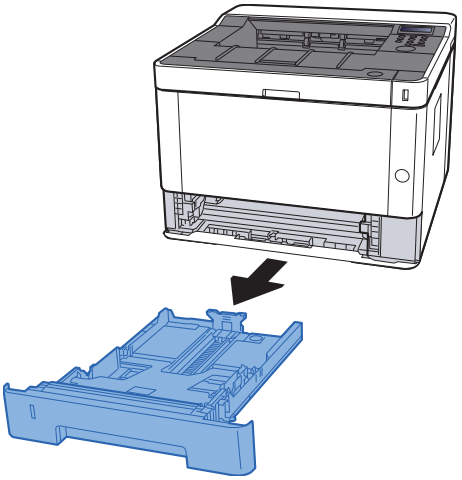

NOTE
When the bottom plate is lifted up, push it until locked.

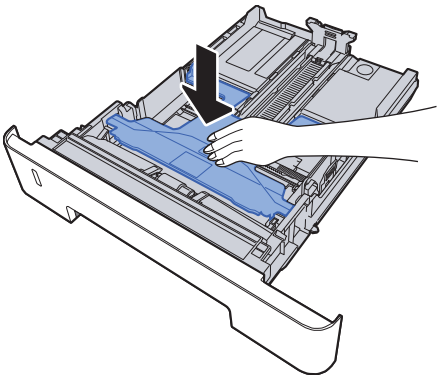

2. Adjust the paper length guide of the cassette.

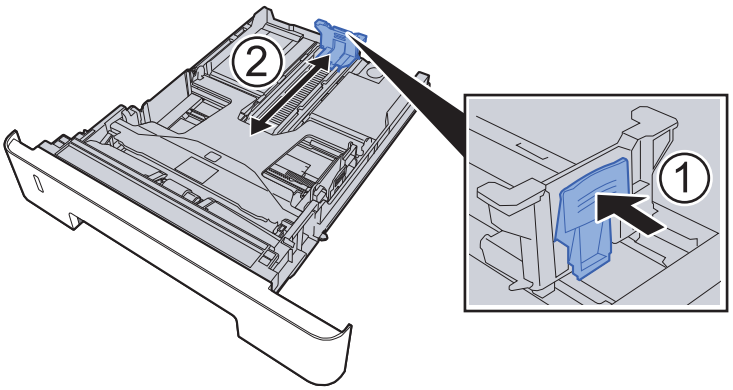

NOTE
In case of using Folio, Oficio II or Legal

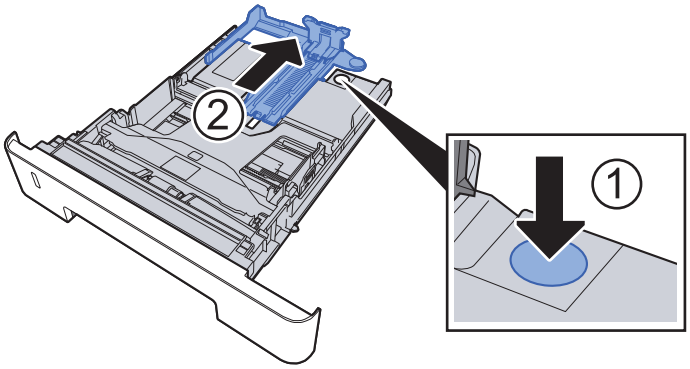

3. Adjust the paper width guides of the cassette

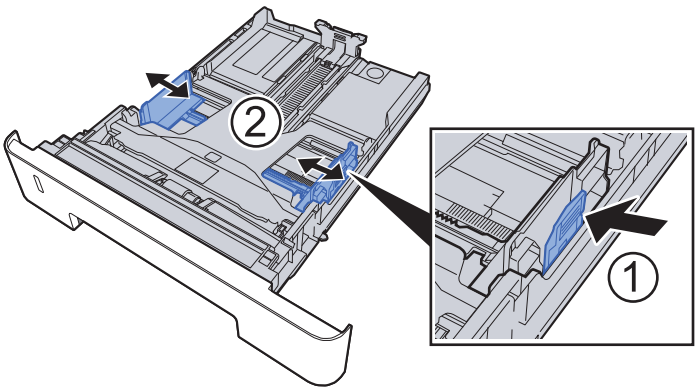

4. Load paper.

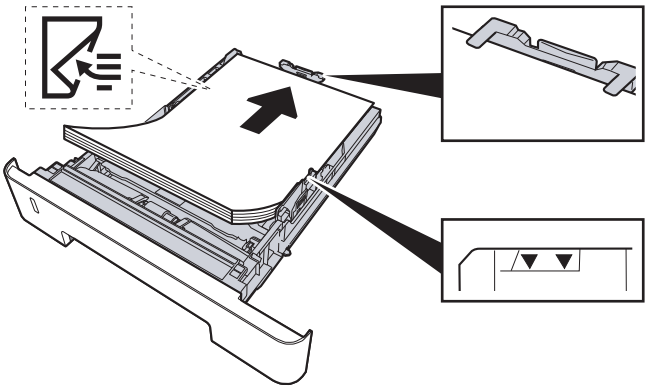

5. Insert the cassette slowly into the main unit as far as it goes.
6. Set the paper size and the paper type from the system menu.

IMPORTANT
Load it with the printing side facing down
Before loading paper in the cassette, fan the paper taken from a new package to separate it.
Before loading the paper, be sure that it is not curled or folded. Such paper may cause paper jams.
Load paper below the maximum paper level.
If the paper is loaded without adjusting the paper length guide and the paper width guides, it causes the skew paper feeding and the paper jam.

Precaution for Loading Paper

Separate the paper taken out of the package in the following procedures before loading it in the cassette.

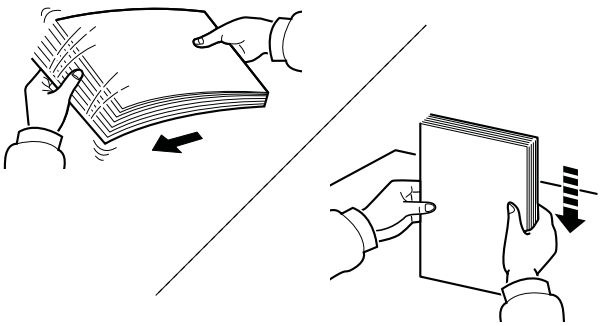

Separate paper and align the edge of the paper in a flat place.
In addition, note the following.
In case of paper fold or curl, stretch it in a straight line. Such paper may cause a jam.
If paper is left in the high humidity environment after taking the paper out of the package, it causes a trouble with moisture. Keep paper remaining paper in the cassette into the sealed paper storage bag. Also, keep paper left on the MP tray into the sealed paper storage bag.
If the machine is not used for a prolonged period, keep paper out of the cassette in the sealed storage bag in order to protect it from humidity.

(6) Power-up

1. Turn the power switch on.

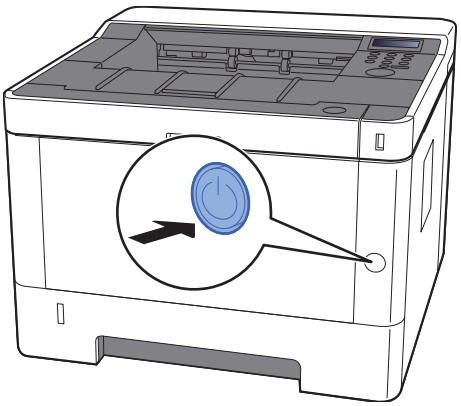

IMPORTANT
Initial Setup will take up to 10min to complete toner installation.

(7) Default

(7-1)Network Settings

Configuring the Wired Network

The machine is equipped with network interface, which is compatible with network protocols such as TCP/IP (IPv4), TCP/IP (IPv6), NetBEUI, and IPSec. It enables network printing on the Windows, Macintosh, UNIX and other platforms. Set up the network connection via TCP/IP (IPv4).
Be sure to connect the network cable before configuring the settings.

TCP/IP (IPv4) Settings

1. Displays the screen.
   1.Launch your Web browser.
   2.In the address or location bar, enter the machine's IP address or the host name.
   The IP address or the host name of the machine can be checked from the status page.
   Print Status Page by pressing and holding the [Go] key for 5 seconds.
   3.Log in with administrator privileges.

   NOTE

   The factory default setting for the default user with administrator privileges is shown below. (Upper case and lower case letters are distinguished (case sensitive).)
   Administrator ID: Admin
   Administrator password: Admin
   4.Click [TCP/IP] from the [Network Settings] menu.

2. Configure the settings.
   1.[DHCP/BOOTP] and [Auto-IP] are set to [Off] in "IPv4 setting (Wired network)" of "TCP/IP".
   2.Enter [IP address] and [Subnet Mask].
   3.Set [Default gateway], [DNS server], [WINS server] and [Host name] if necessary in [IPv4 setting(common)].
   4.Click [Submit].

   IMPORTANT

   Restarting the network interface card is necessary after changing the setting. Turn the power switch off/on.

   NOTE

   Ask your network administrator for the IP address in advance, and have it ready when you configure this setting.
   In the following cases, set the IP address of DNS server by using Command Center RX.
   When using the host name with the "DHCP" set to [Off]
   When using the DNS server other than the DNS server, IP address of which is assigned by the DHCP automatically,
   With regard to the IP address setting of the DNS server, refer to Command Center RX operating procedures.

Wireless network setting

When setting up the connection of the model equipped with the Wi-Fi function, printing is available in a wireless network (wireless LAN) environment.
The configuration methods are as follows:

Configuration Method	Descriptions
Setting the Connection by Using the Wi-Fi Setup Tool	This is the tool included in the Product Library. You can configure the connection according to the instructions provided by the wizard.
Configuring Connections on the Web Page	It can be set from the Command Center RX.

NOTE

If you switch other network interface than wired, change to the appropriate setting value in [Primary Network].

(7-2)Altitude Adjustment Setting

Execute [Maintenance Menu] from DVD (Product Liberty) when setting up at a high altitude place. When the usage environment is at altitudes of sea level 1,000m or more and the printing quality is declined, set the altitude adjustment mode and you can recover the print quality.

(7-3) Installing Software

In case of using the printer function, TWAIN / WIA connection and Network FAX function in the machine, install necessary software from the DVD (Product Library)

Software on DVD (Windows)

You can use either [Express Install] or [Custom Install] can be selected for the installation method. [Express Install] is the standard installation method. To install components that cannot be installed by [Express Install], use [Custom Install].

Software	Description	Express Install
KX DRIVER	This driver enables files on a computer to be printed by the machine. Multiple page description languages (PCL XL, KPDL, etc.) are supported by a single driver. This printer driver allows you to take full advantage of the features of the machine. Use this driver to create PDF files.	○
KX XPS DRIVER	This printer driver supports the XPS (XML Paper Specification) format developed by Microsoft Corporation.	-
KPDL mini-driver/PCL mini-driver	This is a Microsoft MiniDriver that supports PCL and KPDL. There are some restrictions on the machine features and option features that can be used with this driver.	-
KYOCERA Net Viewer	This is a utility that enables monitoring of the machine on the network.	-
Status Monitor	This is a utility that monitors the printer status and provides an ongoing reporting function.	○
KYOCERA Net Direct Print	This makes it possible to print a PDF file without starting Adobe Acrobat/Reader.	-
FONTS	These are display fonts that enable the machine's built-in fonts to be used in a software application.	○

NOTE

Installation on Windows must be done by a user logged on with administrator privileges.

WIA Driver and cannot be installed on Windows XP.

(7-4) Output Status Page

1. Press and hold the [Go] key for three to nine seconds.
*: Output of the service status page by pressing and holding it 10 seconds or more.

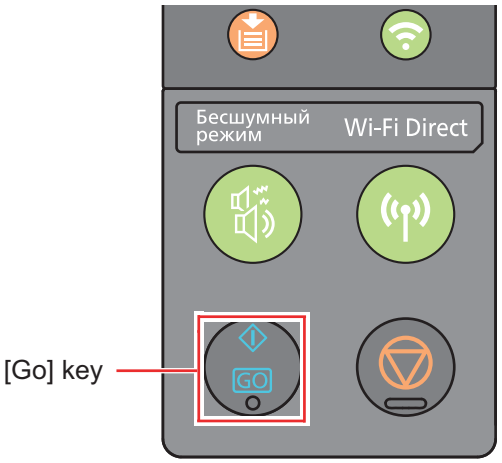

2. Status page is printed.

(7-5) Completion of installing the main unit (Turning the power off)

1. Check if the [Processing] lamp is turned off and turn the power switch off.
*: It takes approximately 3 minutes for power off.

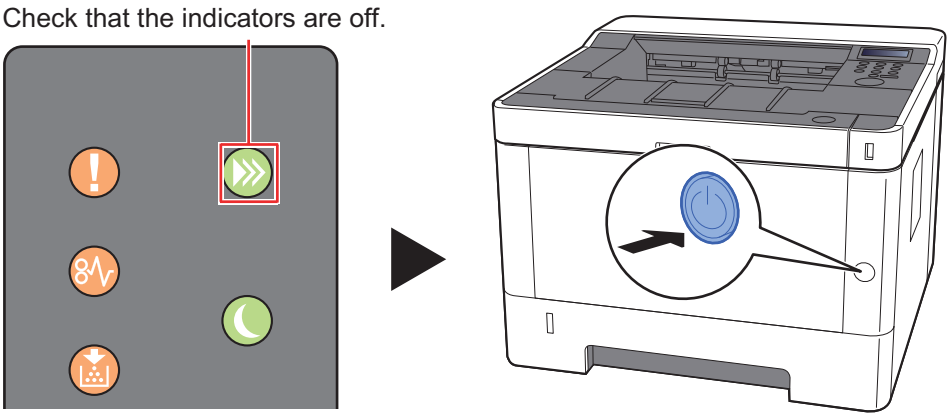

IMPORTANT
While the [Processing] lamp is lit, the main unit is operating. If you turn the power switch off while the main unit is operating, it may cause malfunctions.

3 Machine Design

3-1 Cross-section view

(1) Main unit + Paper feeder (option)

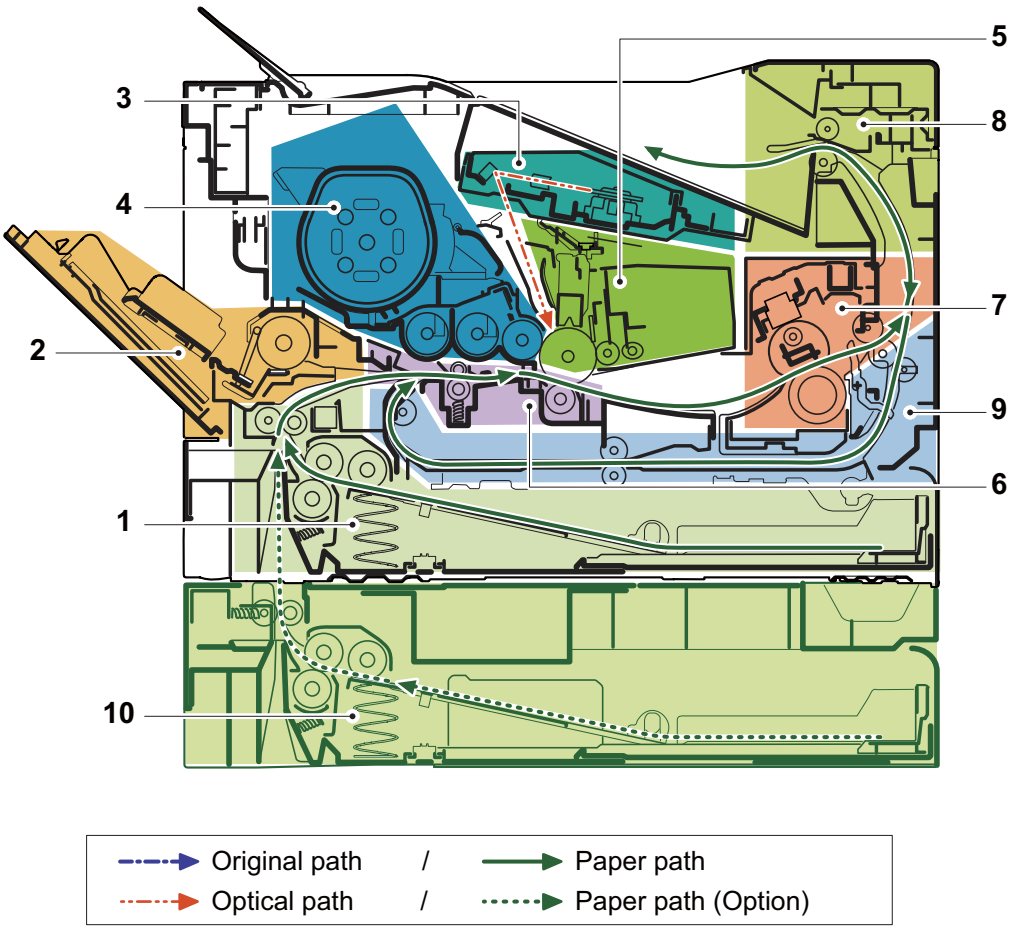

1. Cassette paper feed
2. MP paper feed section
3. Laser scanner unit
4. Developer unit
5. Drum unit
6. Conveying/Transfer section
7. Fuser section
8. Feedshift and eject section
9. Duplex conveying section
10. Paper feeder (option)

3-2 The configuration of the electrical components

(1) Electric parts

(1-1) Machine left side

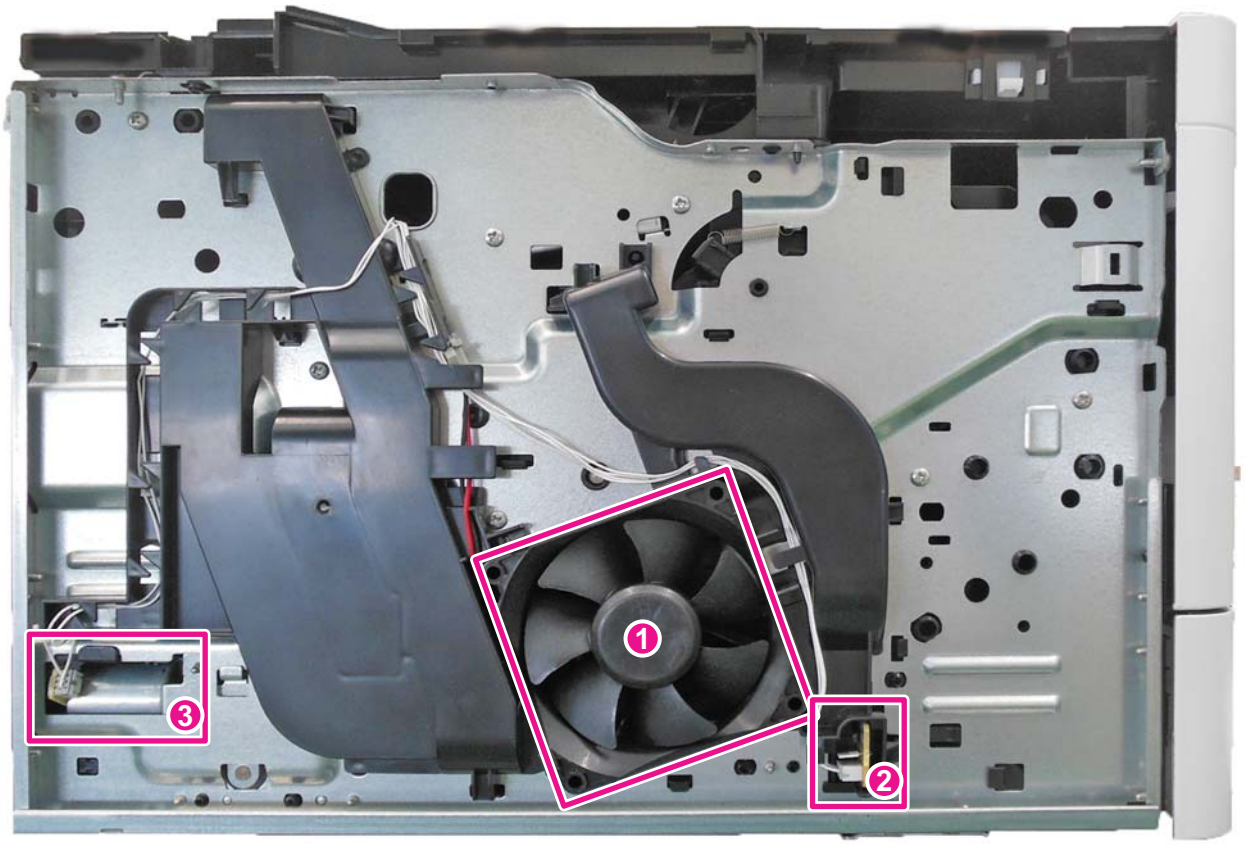

1. Left side fan motor
2. Temp/Humid sensor
3. Fuser pressure release motor

(1-2) Machine right side

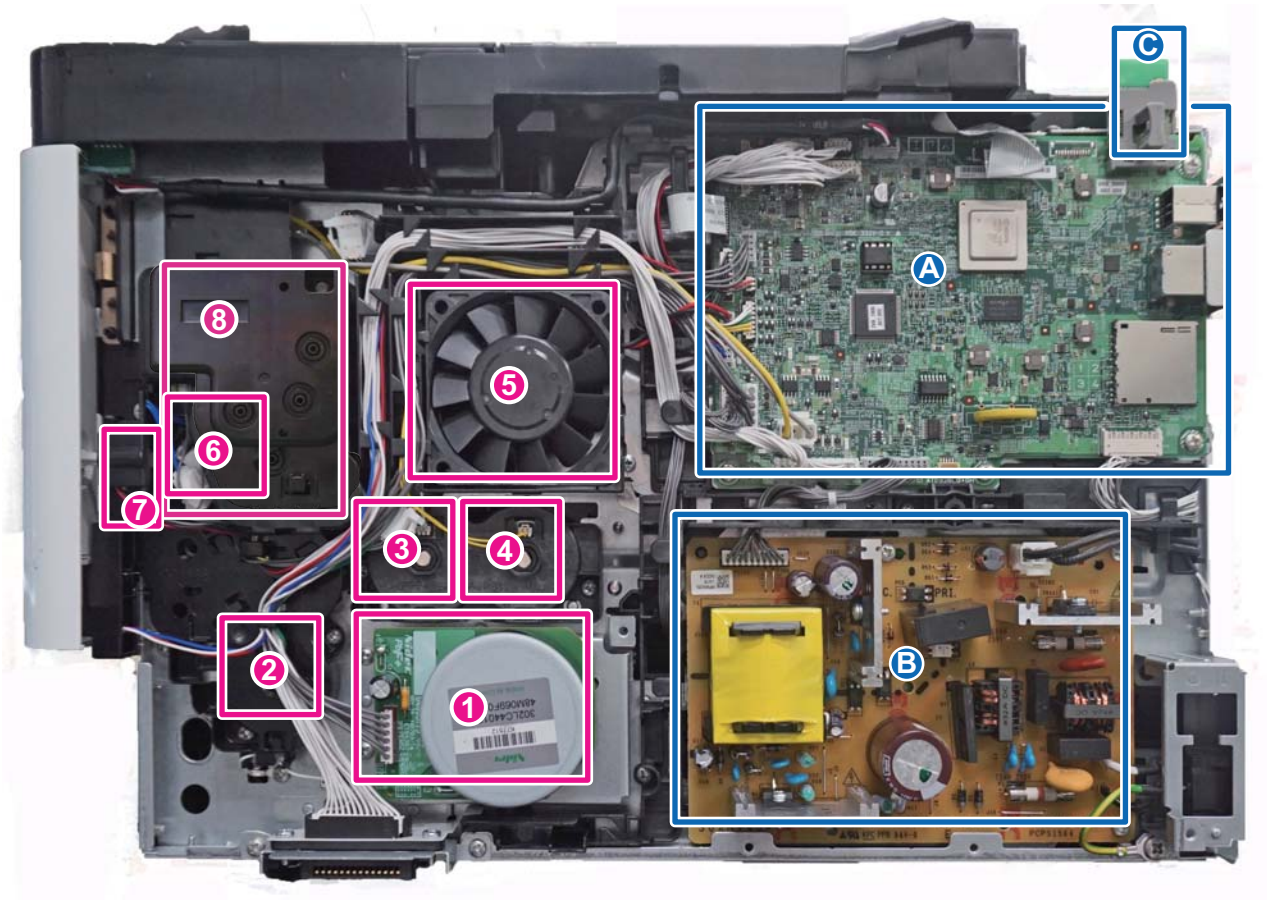

1. Paper feed motor
2. Paper feed clutch
3. Registration clutch
4. Developer clutch
5. Rit side fan motor
6. MP solenoid
7. Power switch
8. Wall motor

A. Main/Engine PWB
B. Low voltage power source PWB
C. Wi-Fi PWB

(1-3) Paper feeder (option)

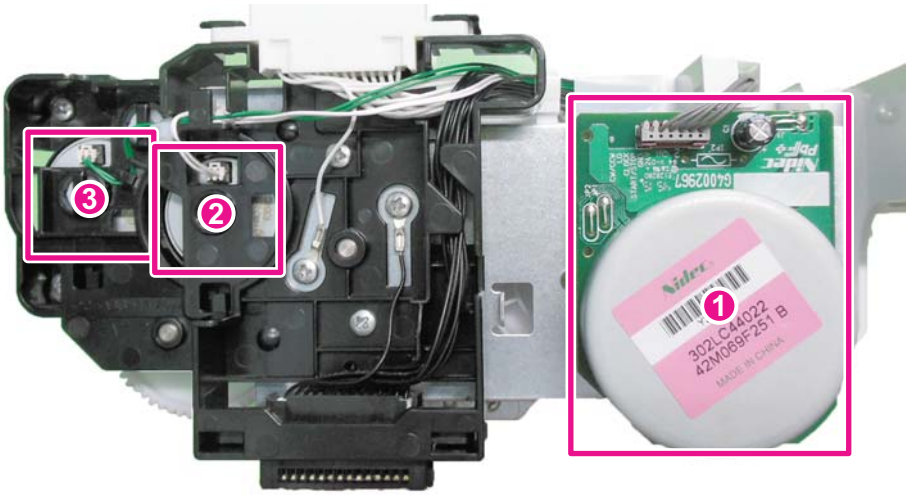

1. PF paper feed motor
2. PF paper feed clutch
3. PF feed clutch

(2) Descriptions about the major PWBs

(2-1) Main/Engine PWB

It controls the software for interface, image data processing, etc. and hardware for the operation unit, high voltage/bias output, paper conveying mechanism, etc.

(2-2) High-voltage PWB

Output the main charger high-voltage, the developer bias, the transfer bias, separation bias and the transfer cleaning bias.

(2-3) Power source PWB

The input voltage (AC) from the AC power supply is changed and output to DC such as DC24V. It also controls the fuser heater.

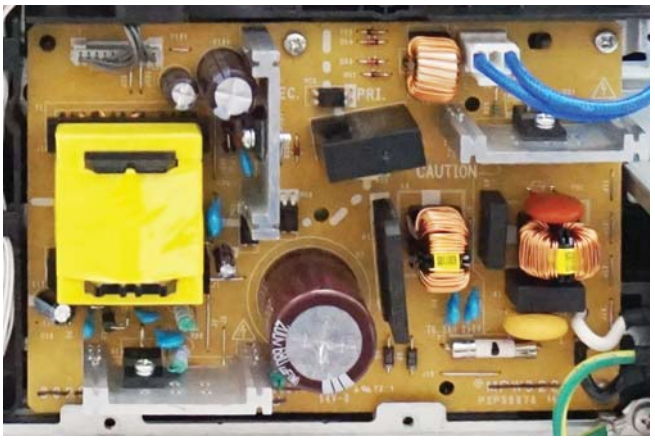

(2-4) Operation panel PWB

It consists of the LED indicators, the key switches.

(3) Electric parts layout

(3-1) PWBs

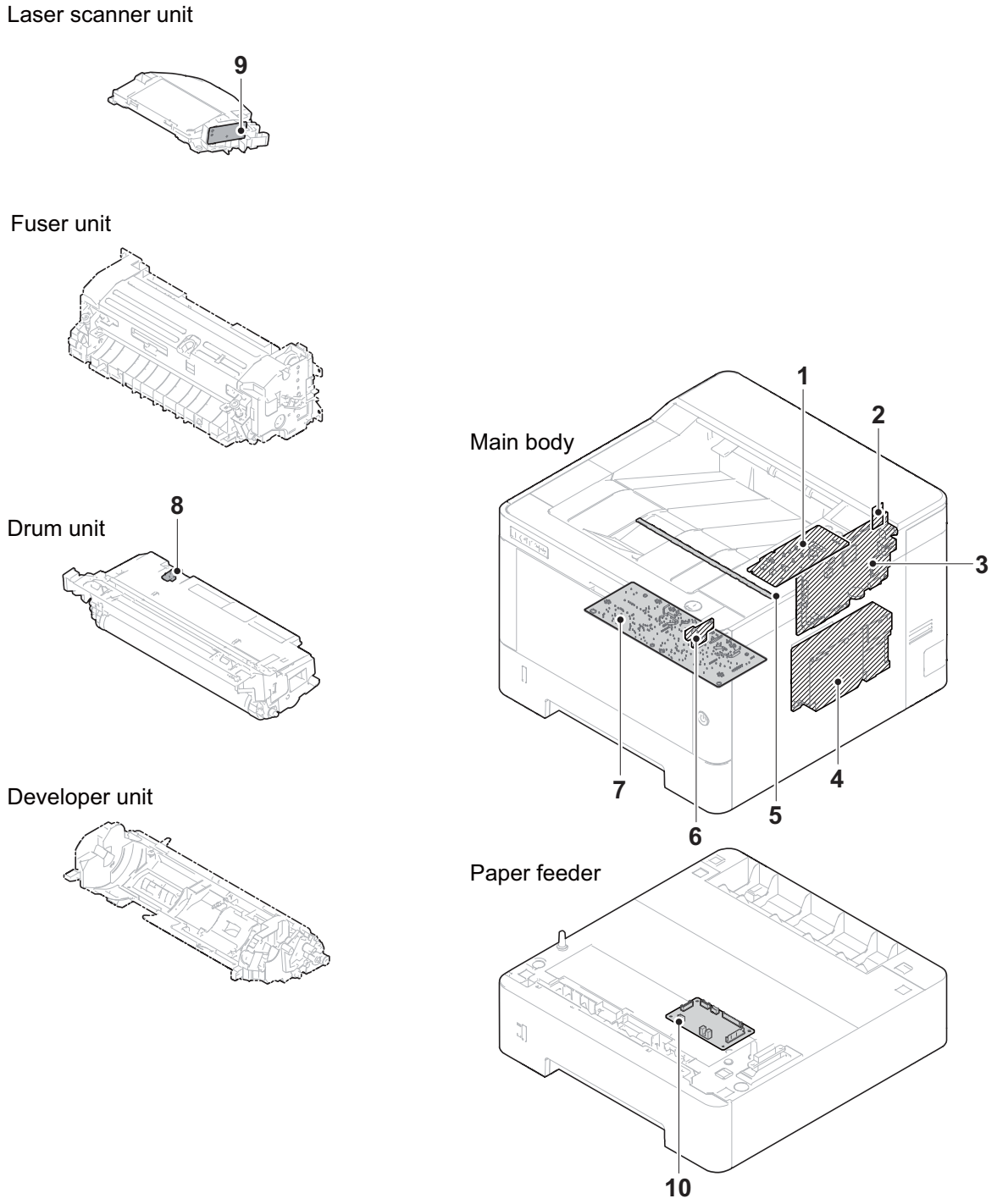

Machine left side / Machine inside / Machine right side

1. Operation panel PWB ..... It consists of LED indicators, key switches.
2. Wi-Fi PWB *1 ..... It communicates wireless data.
3. Main/Engine PWB ..... It controls the software for the interface and image data processing, and controls the hardware such as the operation section, high voltage/bias output, paper conveying mechanism, etc.
4. Lower voltage power source PWB ..... The input voltage (AC) from the AC power supply is changed and output to DC such as DC24V. It also controls the fuser heater.
5. Eraser PWB ..... Removing the remaining electric charge on the drum.
6. USB PWB ..... Distribution of USB connector
7. High voltage PWB ..... Output the main charger high-voltage and the developer bias, the transfer bias, separation bias and the transfer cleaning bias.
8. Grid PWB ..... Controlling the grid currency
9. APC PWB ..... Emitting and controlling the laser beam.
10. PF main PWB ..... Controlling the drive of each electric parts in the PF.

*1:Wi-Fi model only

Part name table

No.	Name used in service manual	Name used in parts list	Part. No.
1	Operation panel PWB	PARTS PWB L PANEL ASSY SP	302RV94100
2	Wi-Fi PWB *1	PARTS WiFi UNIT SP	302R794010
3	Main/Engine PWB	PARTS PWB MAIN ENGINE ASSY SP PARTS PWB MAIN ENGINE ASSY SP PARTS PWB MAIN ENGINE ASSY SP	302VB94010 302VN94010 302VP94010
4	Lower voltage power source PWB	PARTS UNIT LOW VOLTAGE 100V SP PARTS UNIT LOW VOLTAGE 230V SP	302RV94210 302RV94220
5	Eraser PWB	PARTS PWB ERASER ASSY SP	302RV94110
6	USB PWB	PARTS PWB FRONT PWB ASSY SP	302RV94120
7	High-voltage PWB	PARTS UNIT HIGH VOLTAGE SP PARTS UNIT HIGH VOLTAGE J SP	302RV94190 302RV94200
8	Grid PWB	(DK-1150)	(302RV93010)
9	APC PWB	(LK-1150)	(302RV93070)
10	PF main PWB	PARTS PWB PF CONT ASSY SP	303RA94010

*1:Wi-Fi model only

(3-2) Sensors and Switches

Laser scanner unit

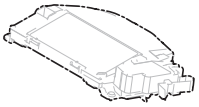

Fuser unit

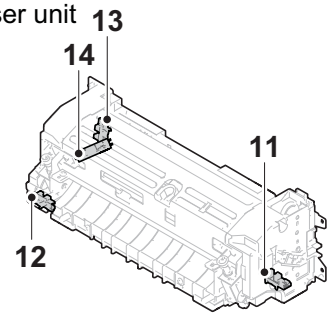

Drum unit

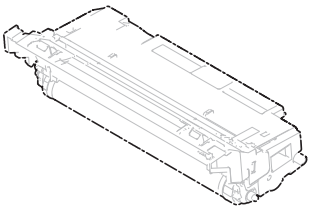

Developer unit

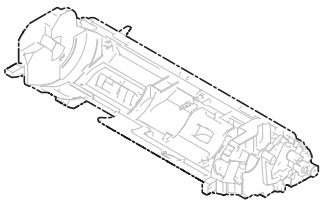

Main body

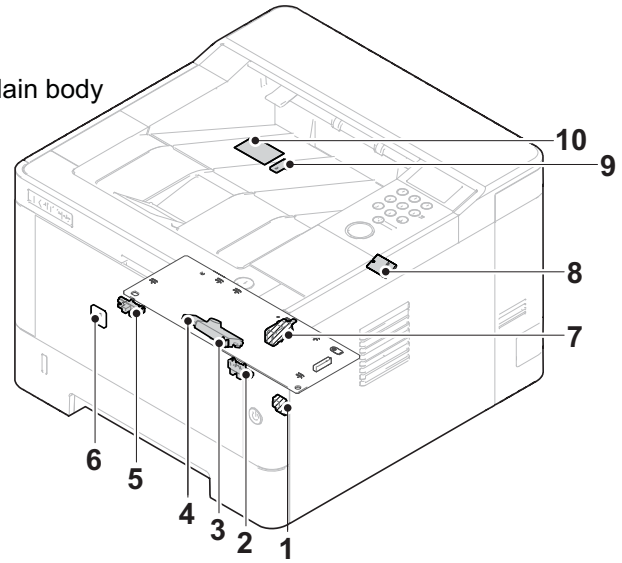

Paper feeder

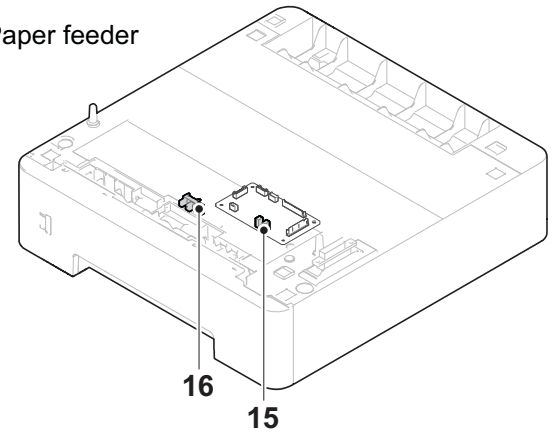

Machine left side / Machine inside / Machine right side

1. Power switch ..... Switching on and off the main/engine PWB and the operation panel PWB, etc.
2. Paper sensor ..... Detecting the presence of paper on the cassette.
3. Registration sensor ..... Controlling the timing to start the secondary paper feeding.
4. Toner sensor ..... Detecting the toner amount inside the developer unit.
5. MP paper sensor ..... Detecting the presence of paper on the MP tray.
6. Temp/Humid sensor ..... Detecting the external temperature and humidity
7. Interlock switch ..... Shutting off the 24V power line when the front cover is opened.
8. Thermopile ..... Detecting a surface temperature of the fuser belt.
9. In-machine temperature sensor ..... Detecting in-machine temperature.
10. Waste toner sensor ..... Detecting the toner amount inside the waste toner box.
11. Eject sensor ..... Detecting the paper jam at the fuser section.
12. Press-release sensor ..... Detecting the mode of the fuser pressure.
13. Fuser edge thermistor ..... Detecting the heat roller temperature (Edge).
14. Rotation detecting sensor ..... Detecting the fuser rotation position
15. Paper sensor ..... Detecting the presence of paper on the PF cassette.
16. PF feed sensor ..... Detecting the conveying timing of PF paper

Part name table

No.	Name used in service manual	Name used in parts list	Part. No.
1	Power switch	PARTS PWB SWITCH ASSY SP	302RV94130
2	Paper sensor	PARTS SENSOR OPT. SP	302P794010
3	Registration sensor	PARTS UNIT HIGH VOLTAGE SP PARTS UNIT HIGH VOLTAGE J SP	302RV94190 302RV94200
4	Toner sensor	PARTS PWB ASSY EMPTY SENSOR SP	302VB94020
5	MP paper sensor	PARTS SENSOR OPT. SP	302P794010
6	Temp/Humid sensor	P.W.BOARD ASSY THERMISTOR	3V2M201100
7	Interlock switch	SW.MICRO	7SM010104+++H01
8	Thermopile	PARTS THERMOPILE ASSY SP	302RH94110
9	In-machine temperature sensor	PARTS PWB THERMISTOR ASSY SP	302RV94150
10	Waste toner sensor	PARTS PWB ASSY FULL SENSOR SP	302RV94140
11	Eject sensor	(FK-1150) (FK-1152) (FK-1151)	(302RV93050) (302RV93060) (302RY93020)
12	Fuser pressure release sensor		
13	Fuser edge thermistor		
14	Rotation detecting sensor		
15	PF paper sensor	PARTS PWB PF CONT ASSY SP	303RA94010
16	PF feed sensor	PARTS SENSOR OPT. SP	302P794010

(3-3) Motors

Laser scanner unit

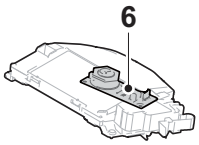

Fuser unit

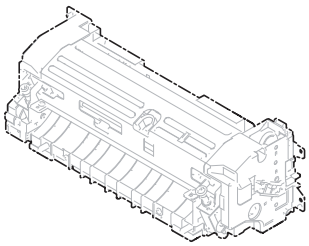

Drum unit

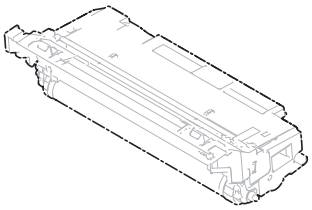

Developer unit

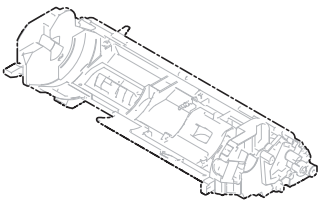

Main body

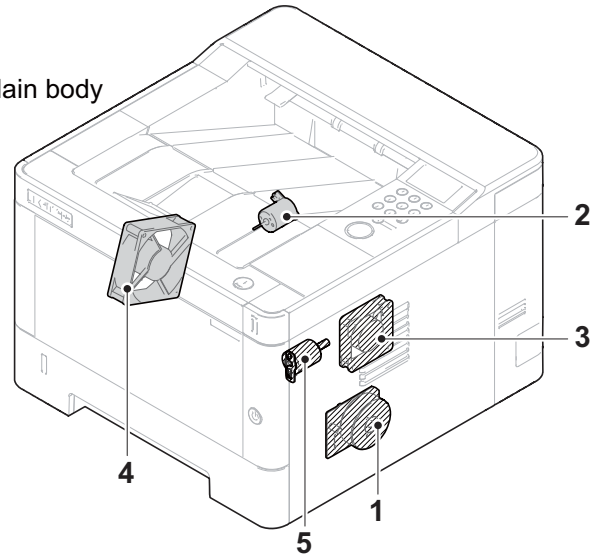

Paper feeder

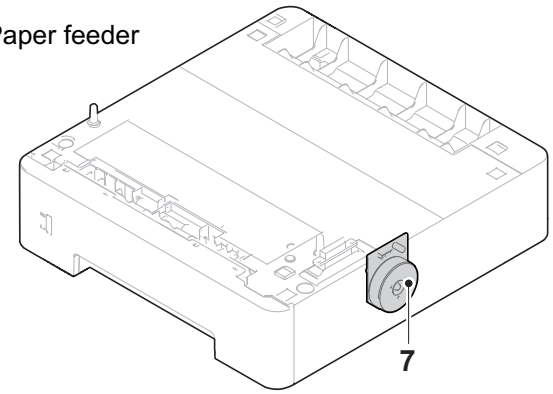

Machine left side / Machine inside / Machine right side

1. Main motor ..... The paper feed and conveying mechanism drive
2. Fuser pressure release motor ..... Fuser pressure release drive
3. Right side fan ..... Cooling inside the machine (right side)
4. Left side fan motor ..... Cooling inside the machine (left side)
5. Wall motor..... Container wall drive
6. Polygon motor..... Drive for polygon mirror.
7. PF paper feed motor..... The paper feed drive of PF paper

Part name table

No.	Name used in service manual	Name used in parts list	Part. No.
1	Main motor	PARTS MOTOR-BL W40 SP	302LC94283
2	Fuser pressure release motor	PARTS DC MOTOR ASSY SP (PARTS DRIVE PRESS RELEASE ASSY SP)	302RV94180 (302RV94030)
3	Right side fan motor	PARTS,FAN COOLING CONVEYING SP	302FZ94420
4	Left side fan motor	PARTS FAN MOTOR SP	302NG94220
5	Wall motor	PARTS DC MOTOR ASSY SP	302RV94180
6	Polygon motor	(LK-1150)	(302RV93070)
7	PF paper feed motor	PARTS MOTOR-BL W10 SP	302LC94292

(3-4) Others

Laser scanner unit

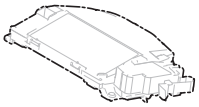

Fuser unit

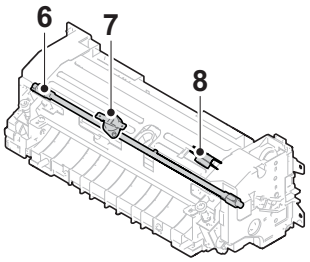

Drum unit

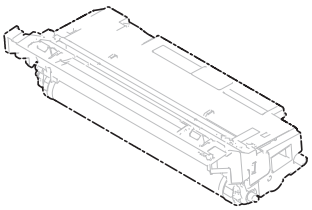

Developer unit

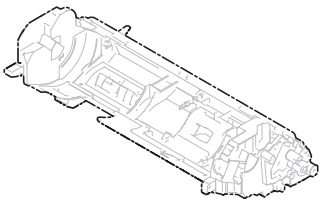

Main body

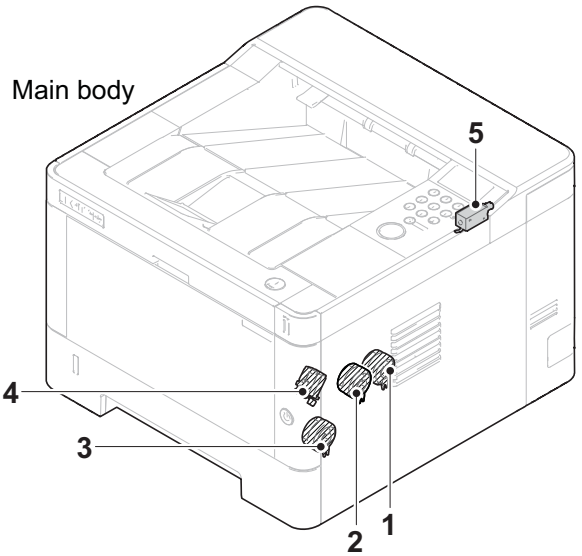

Paper feeder

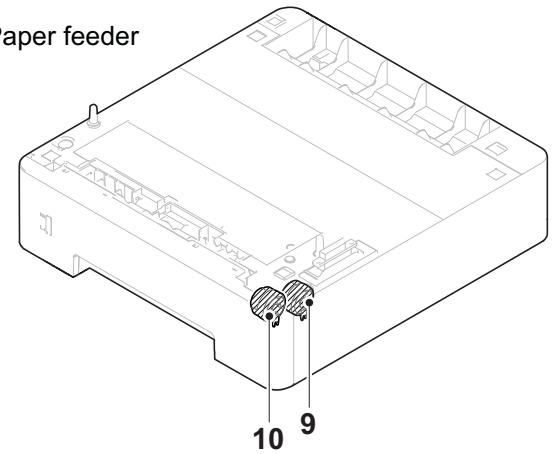

Machine left side / Machine inside / Machine right side

1. Developer clutch ..... Controlling the drive to developer unit.
2. Registration clutch ..... Registration roller drive control
3. Paper feed clutch ..... Controlling the drive of cassette paper feed
4. MP solenoid ..... Controlling the drive of MP lift guide
5. Eject solenoid ..... Switching the reverse guide
6. Fuser heater ..... Heating the fuser belt
7. Thermal cut (center) ..... Shutting off the fuser heater power supply when the heat roller is abnormally high (edge).
8. Thermal cut (edge) ..... Shutting off the fuser heater power supply when the heat roller is abnormally high (edge).
9. PF paper feed clutch ..... Controlling the drive of PF cassette paper feed
10. PF feed clutch ..... Controlling the conveying drive of PF paper

Part name table

No.	Name used in service manual	Name used in parts list	Part. No.
1	Developer clutch	PARTS CLUTCH 35 Z35R SP	302NR94010
2	Registration clutch	PARTS CLUTCH 35 Z35R SP	302NR94010
3	Paper feed clutch	PARTS CLUTCH 35 Z35R SP	302NR94010
4	MP solenoid	SOLENOID MPF	302HN44160
5	Eject solenoid	SOLENOID FD ASSY SP	302HN94140
6	Fuser heater	(FK-1150)	(302RV93050)
7	Thermal cut (center)		
8	Thermal cut (edge)		
9	PF paper feed clutch	PARTS CLUTCH 35 Z35R SP	302NR94010
10	PF feed roller	PARTS CLUTCH 35 Z35R SP	302NR94010

3-3 Drive system

(1) Drive system for the paper conveying

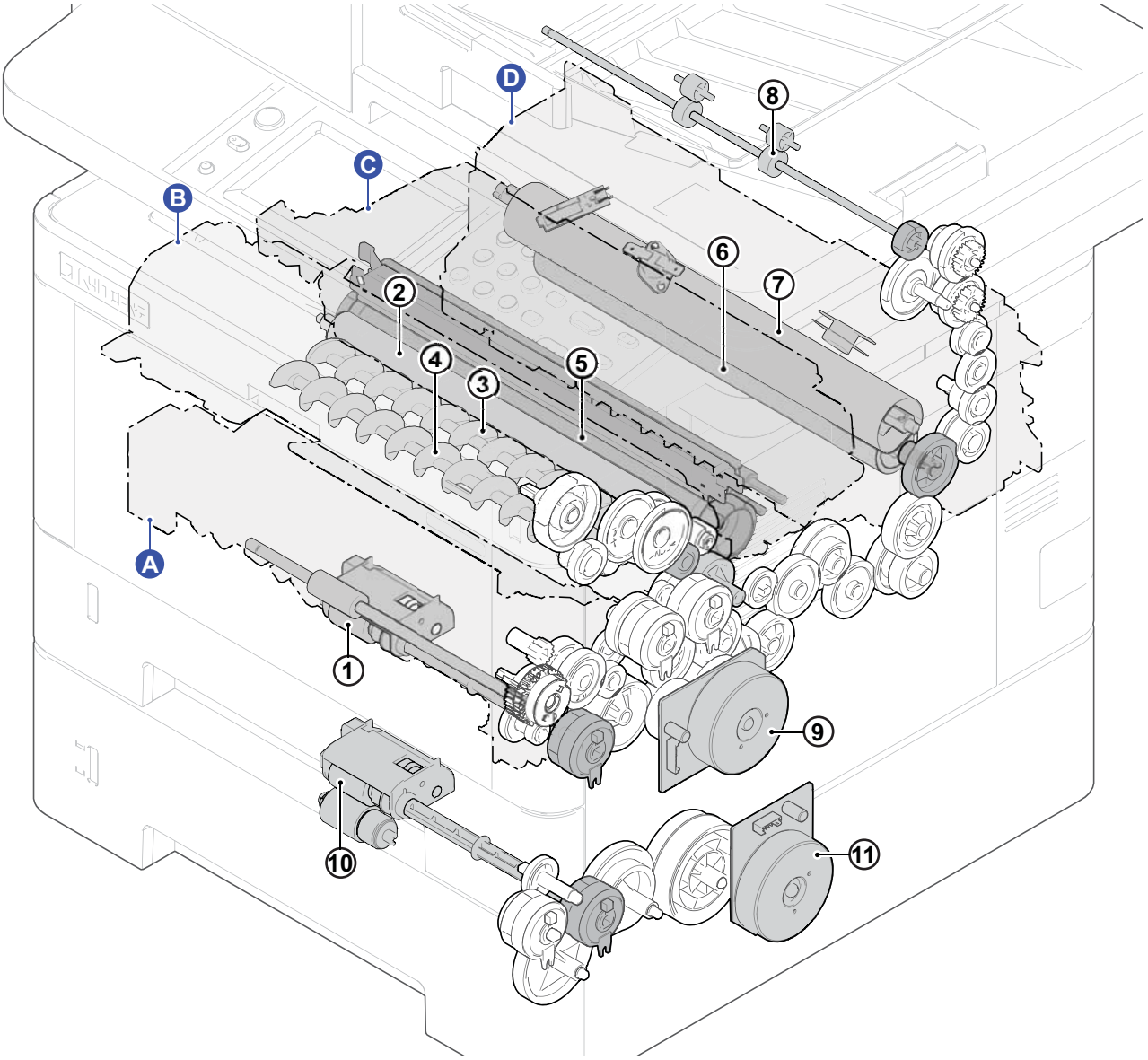

A. Primary paper feed
1. Paper feed roller

B. Developer unit
2. Developer roller
3. Screw roller a
4. Screw roller b

C. Drum unit
5. Drum

D. Fuser unit
6. Press roller
7. Belt roller
8. Eject roller
9. Main motor
10. PF paper feed roller
11. PF conveying motor

(2) Each section drive

(2-1) Primary paper feed drive

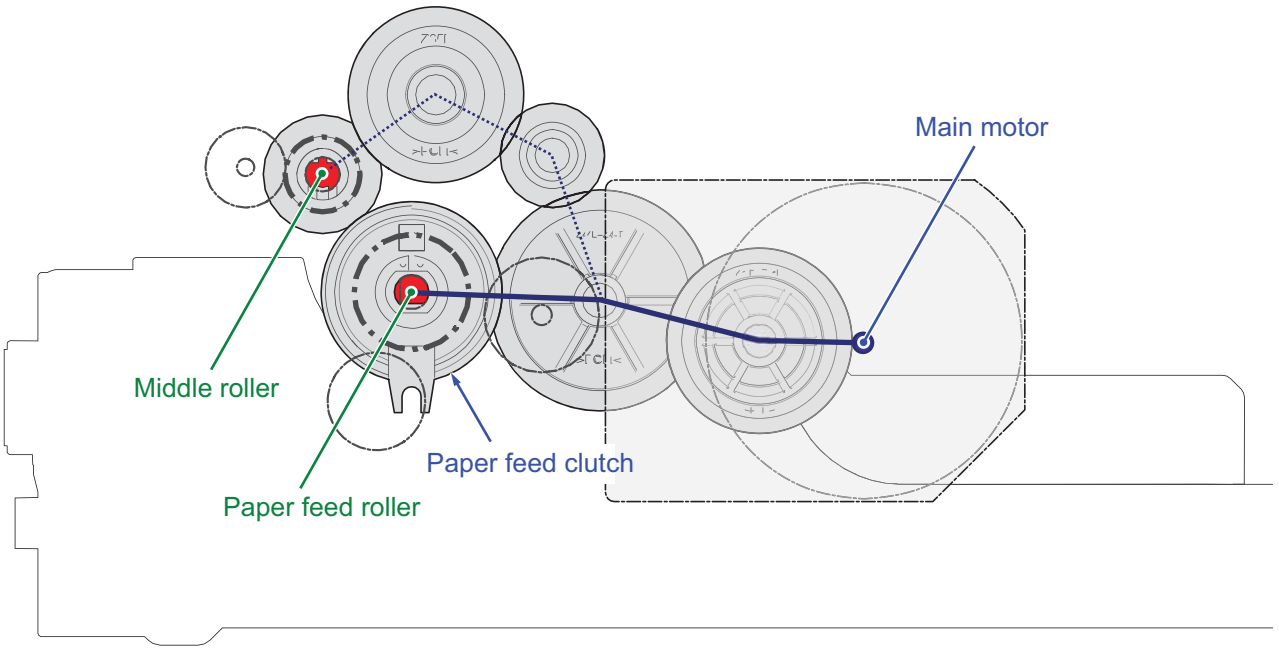

(2-2) Drum drive

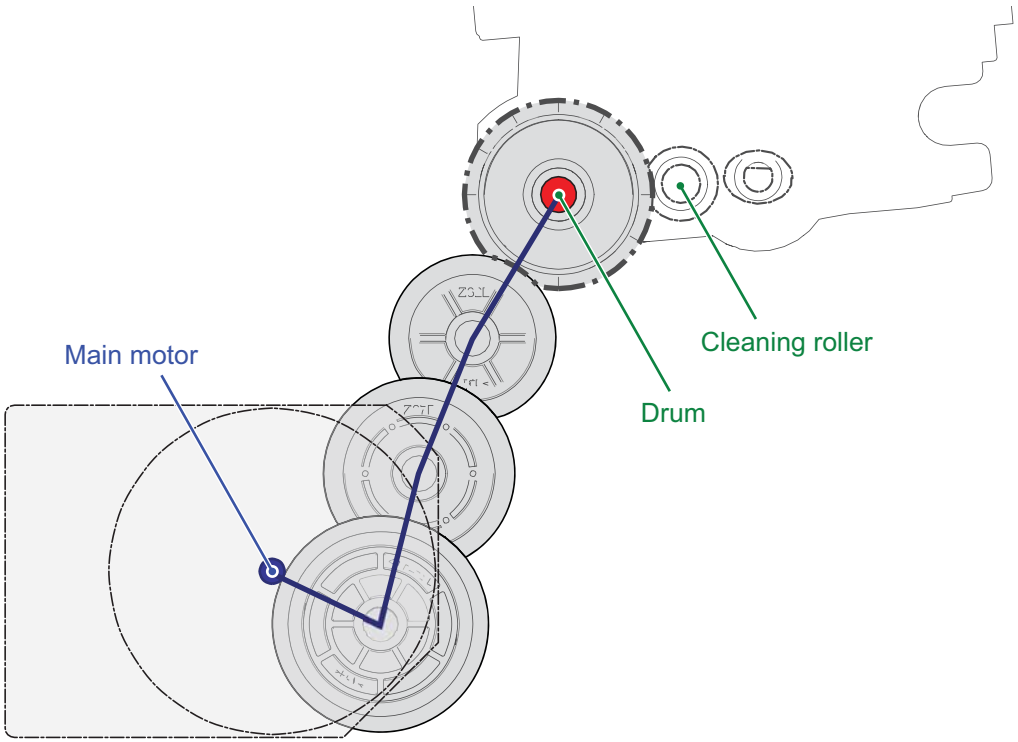

(2-3) Developer drive

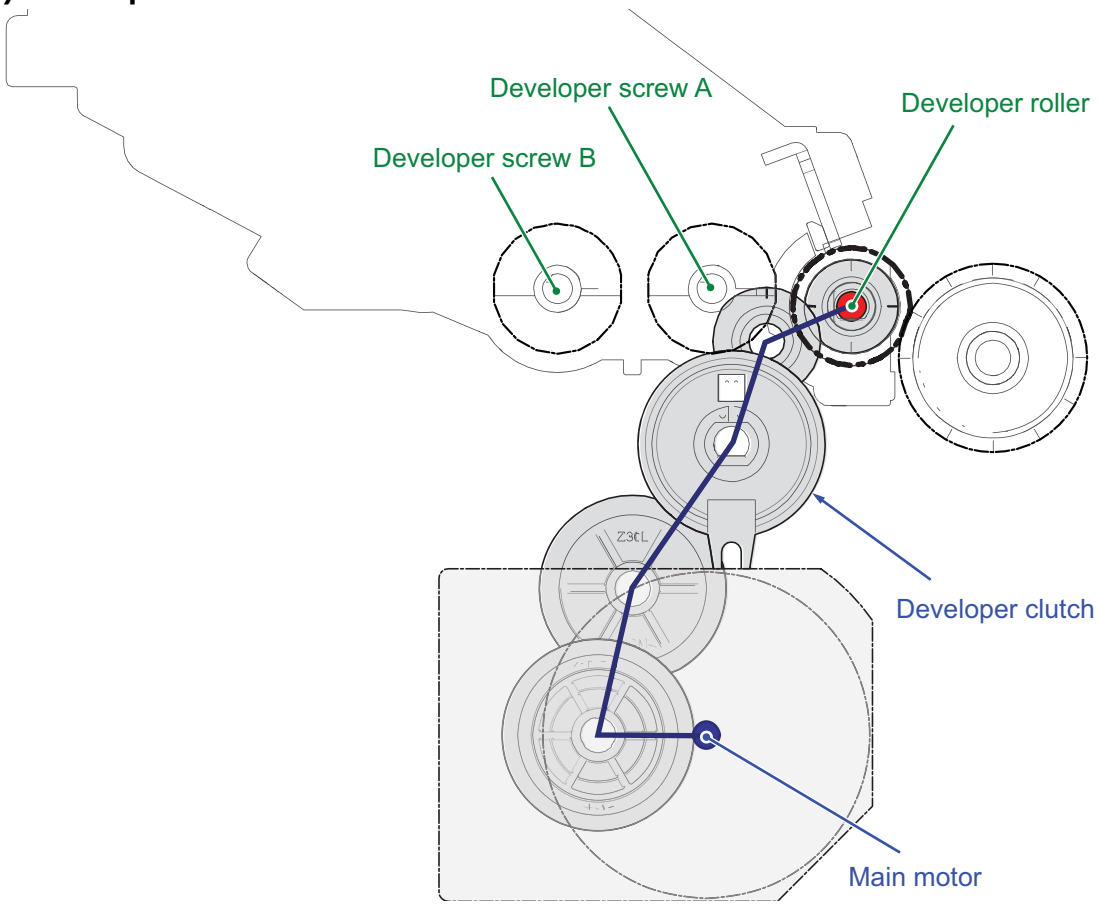

(2-4) Container wall drive

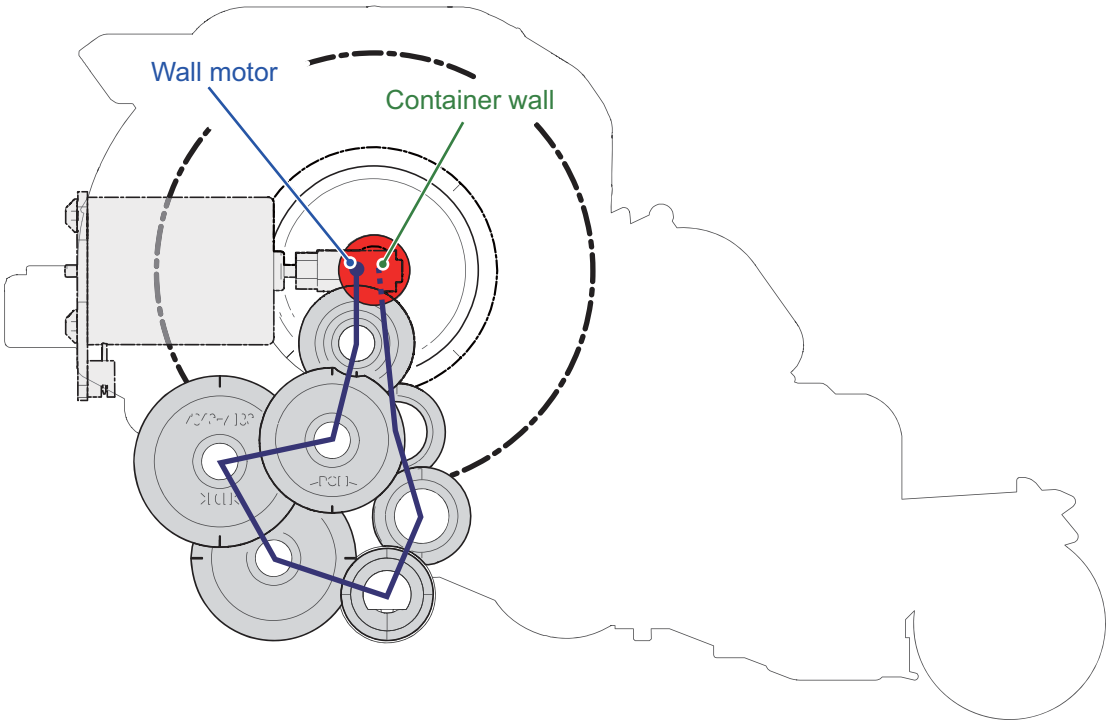

(2-5) Fuser unit drive

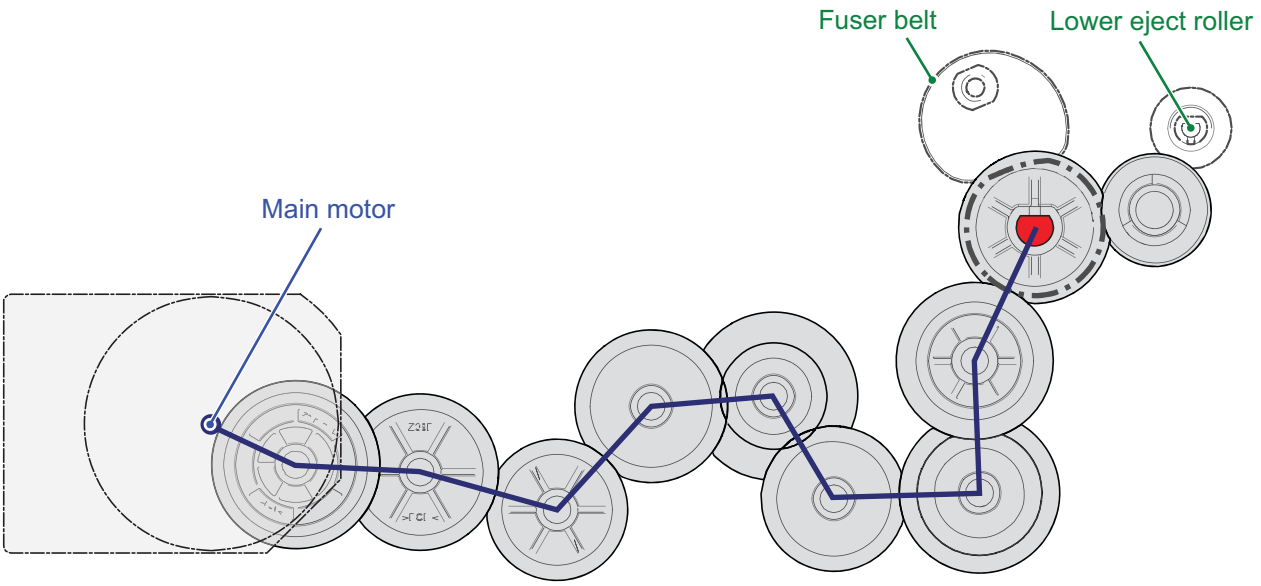

3-4 Mechanical construction

(1) Paper feed section

The paper feed section consists of the cassette feed section which feeds from the paper cassette and the MP tray feed section which feeds from the MP tray.

(1-1) Cassette paper feed section

The cassette can 300 sheets paper (64g/m^2) or 250 sheets paper (80g/m^2). As for the paper feed from the cassette, paper is pulled out by the pickup roller rotation and conveyed to the paper conveying section by the feed roller rotation. Multi-feeding is also prevented by the effect of the retard roller.
The fed paper is conveyed by the middle roller to the position where it turns the registration sensor on.

Components parts

1. Pickup roller
2. Paper feed roller
3. Retard roller
4. Cassette bottom plate
5. Friction pad
6. Paper width guides
7. Paper length guide
8. Middle roller
9. Middle pulley
10. Actuator (Paper sensor)
11. Cassette base
12. Extension tray button
13. Extension tray

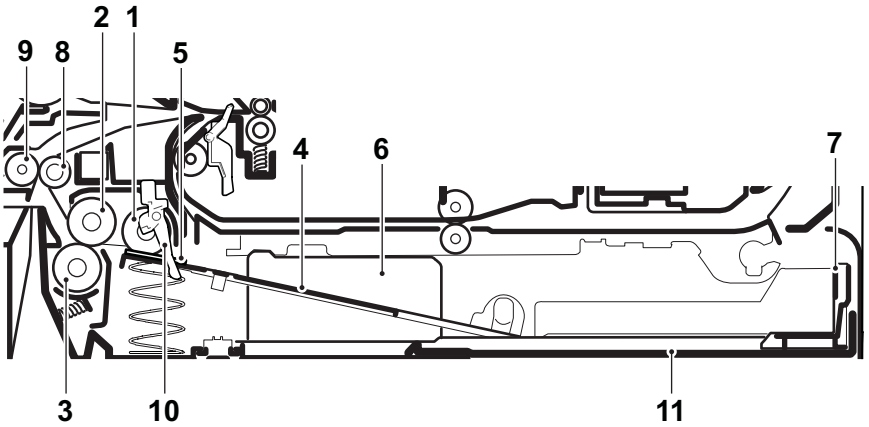

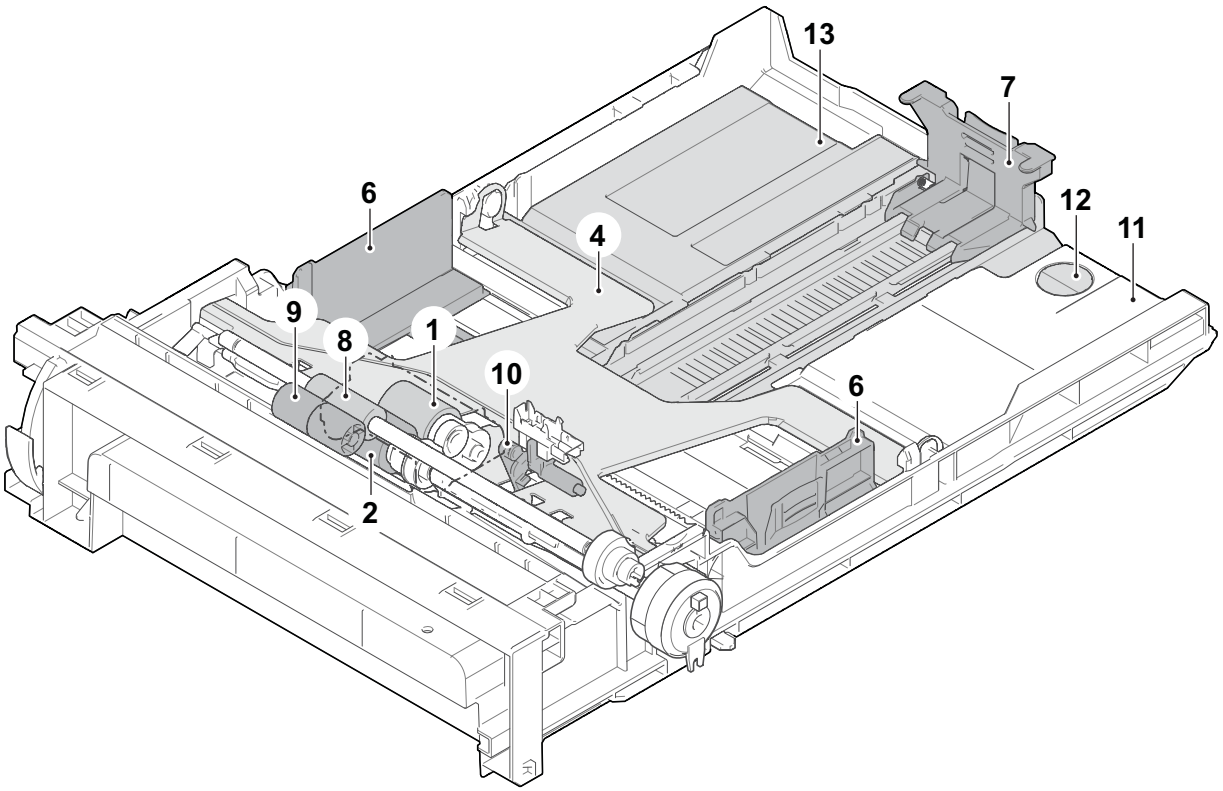

Block diagram

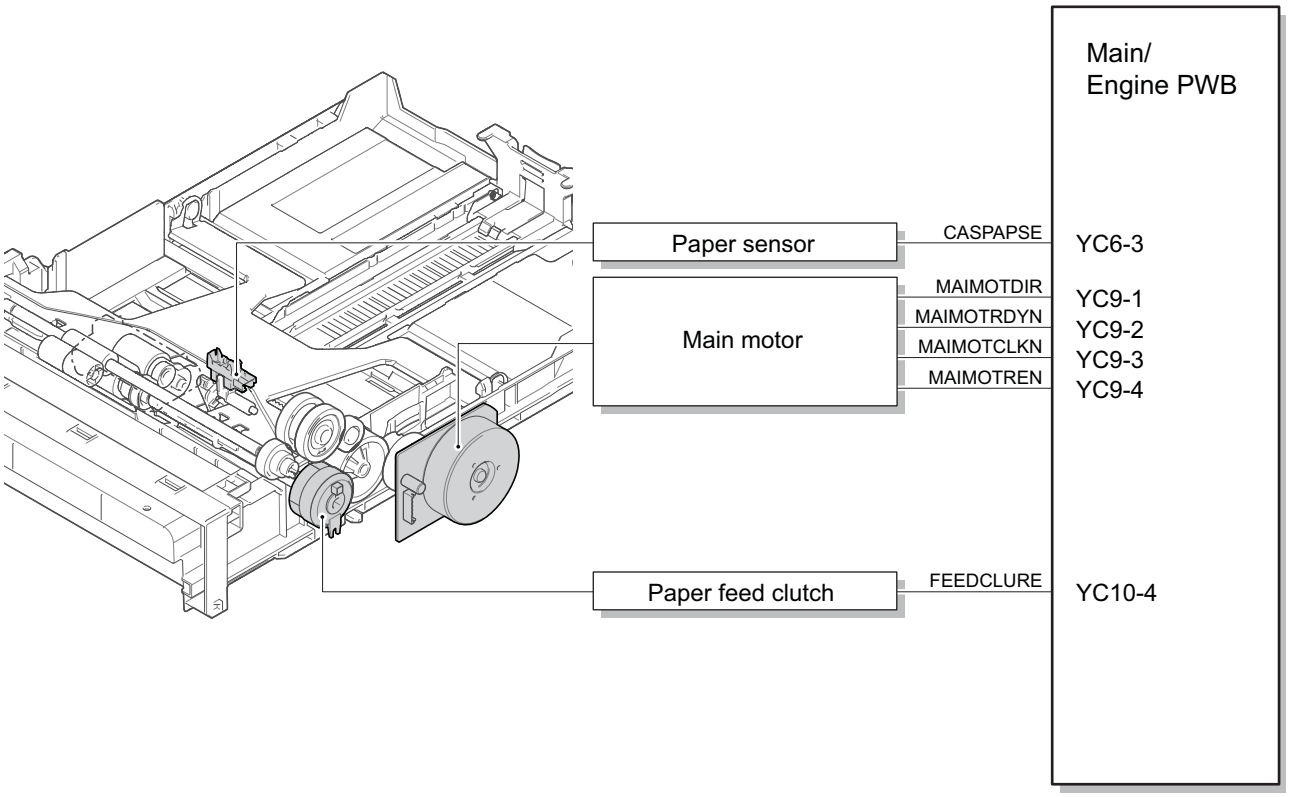

(1-2) MP tray paper feed section

The MP tray can load 60 sheets paper (64 g/m^2) or 50 sheets (80 g/m^2). The paper on the MP tray is fed by rotating the MP paper feed roller while lifting up the MP bottom plate by the MP solenoid. Multi-feeding is also prevented by the effect of the MP separation pad.
The fed paper is conveyed by the MP feed roller to the position where it turns the registration sensor on.

Components parts

1. MP paper feed roller
2. MP separation pad
3. MP friction plate
4. MP bottom plate
5. MP paper width guides
6. MP tray
7. MP tray sub
8. MP actuator
   (MP paper sensor)

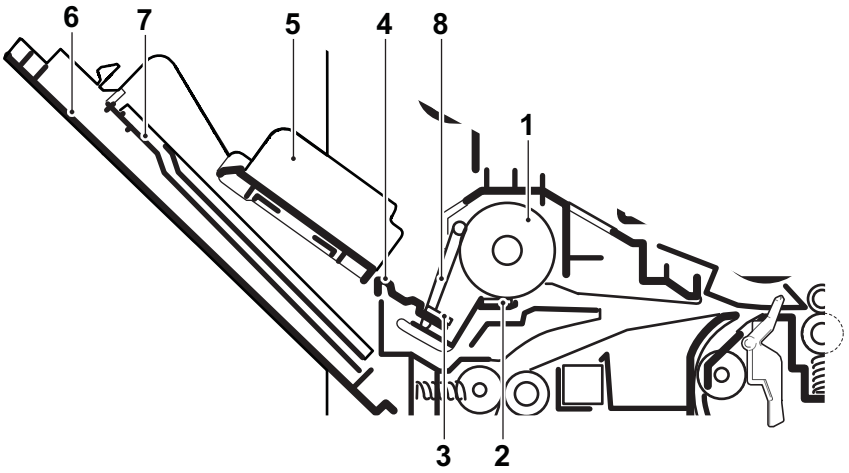

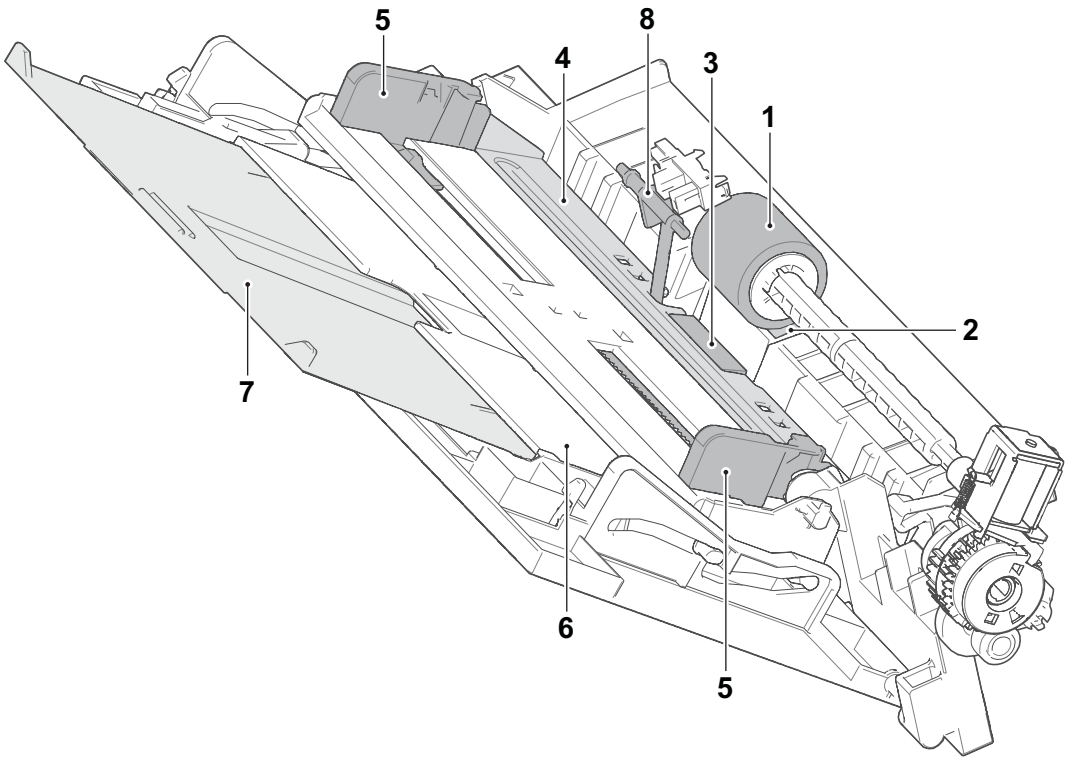

Block diagram

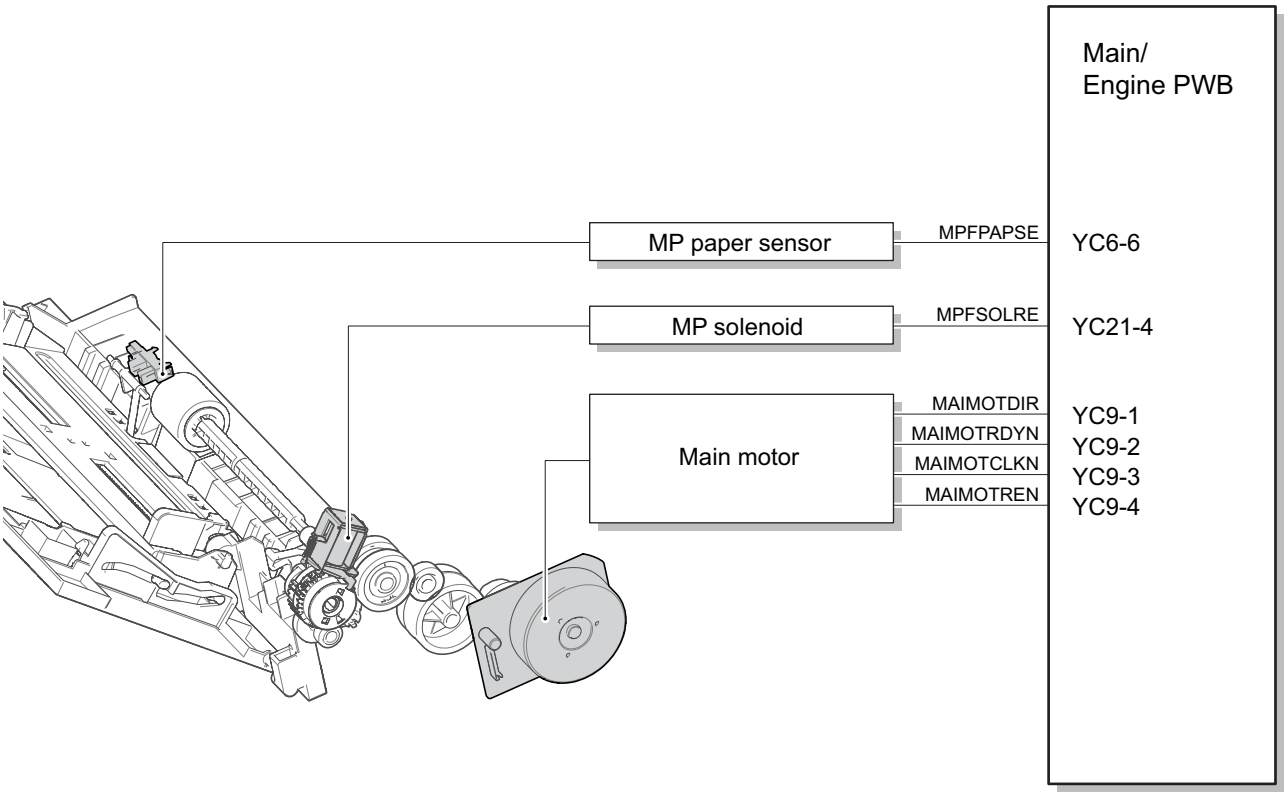

(2) Optical section

(2-1) Laser scanner unit

The charged drum surface is scanned by the laser emitted from the laser scanner units. The laser reflects to the polygon mirrors by rotating the polygon motor so that the laser scans horizontally to the image. The laser scanner unit has some lenses and mirrors, that adjust the diameter of the laser to focus the laser to the drum surface.

Components parts

1. Polygon motor
2. fθ lens
3. Mirror
4. Laser scanner frame
5. Collimate lens
6. Cylindrical lens
7. Laser bracket
8. Drum

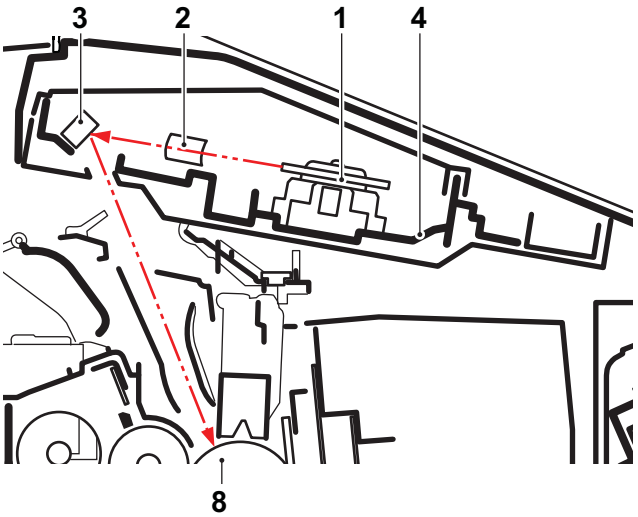

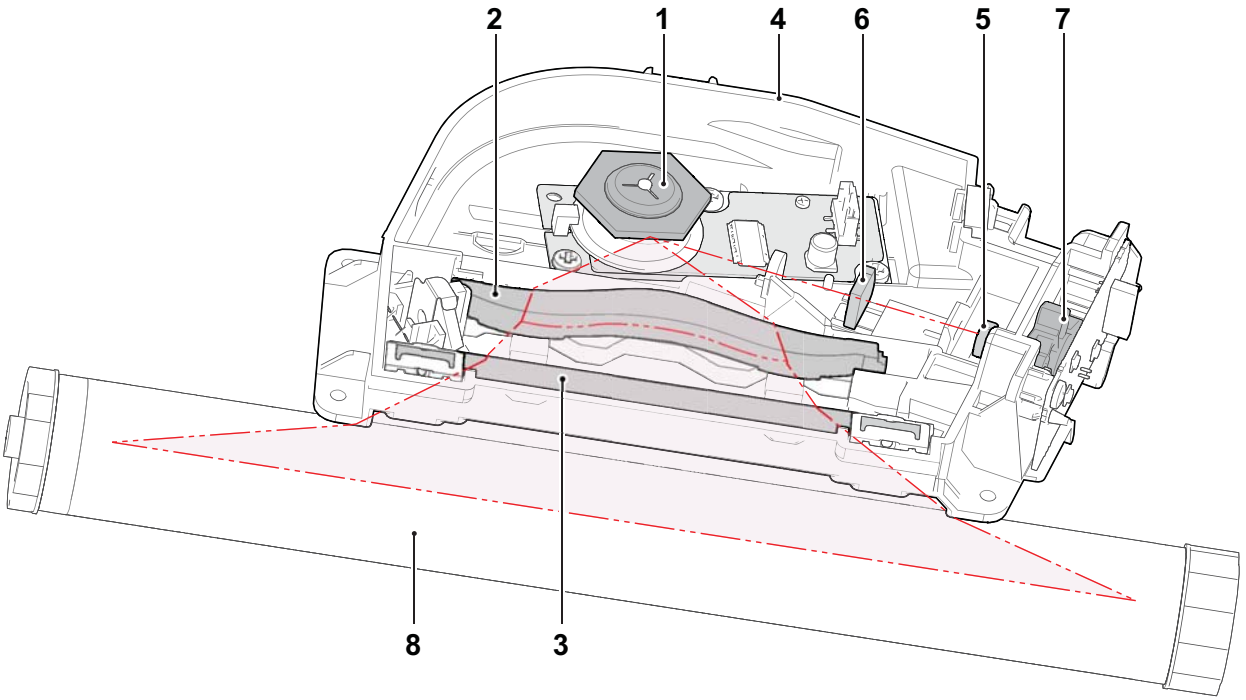

Block diagram

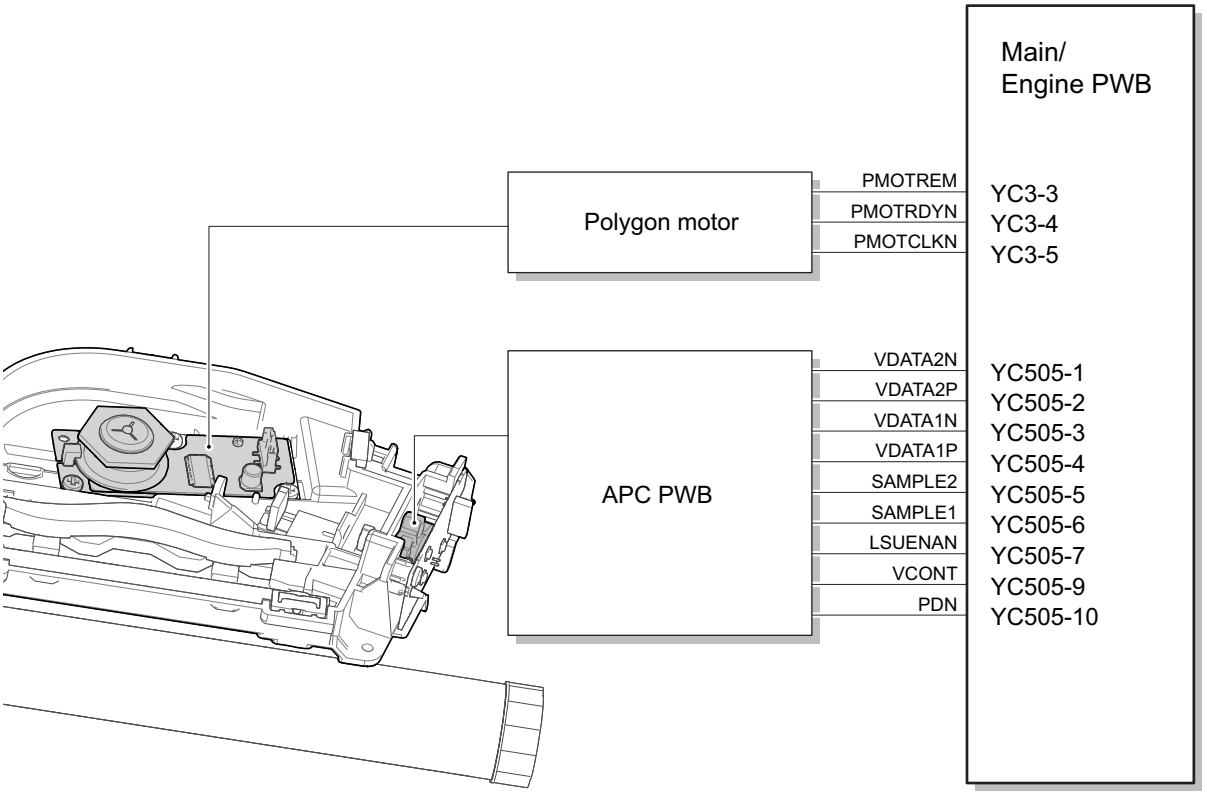

(3) Developer section

(3-1) Developer unit

The developer section consists of the developer roller forming the magnetic brush, the developer blade forming the thin layer by moving the toner, and the developer screw mixing up the toner. The toner density is adjusted by impressing the bias to the developer roller. The toner amount inside the developer unit is detected by the T/C sensor.

Components parts

1. Developer roller
2. Developer blade
3. Blade magnet
4. Developer screw A
5. Developer screw B
6. Developer case
7. Toner container release button
8. Toner sensor
9. Developer shutter
10. Drum
11. Toner container

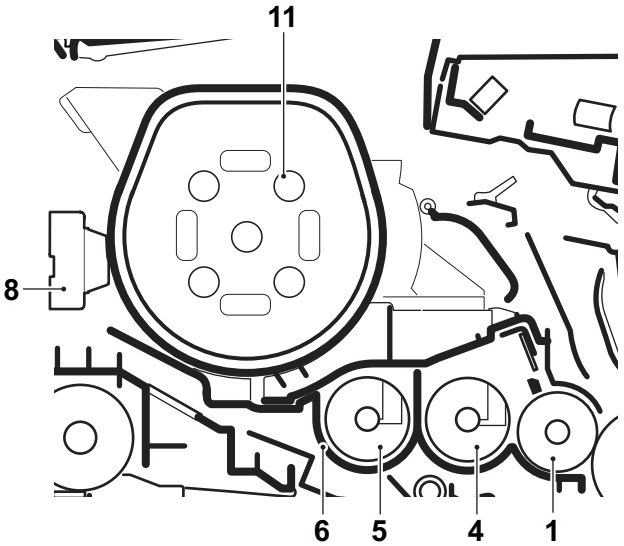

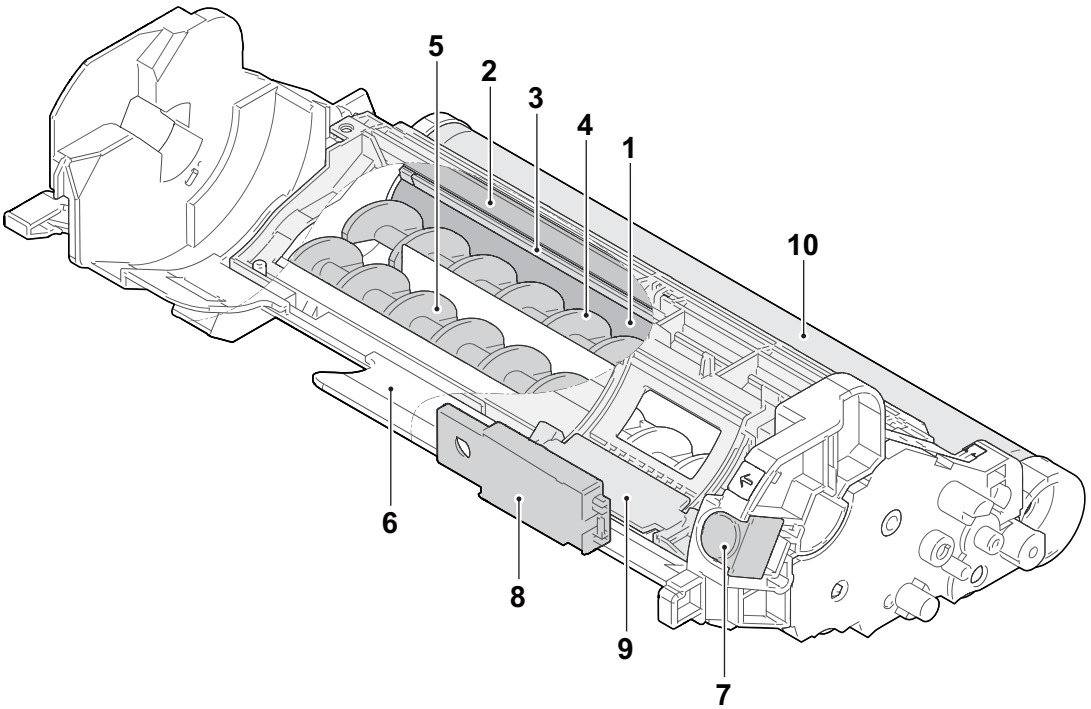

Block diagram

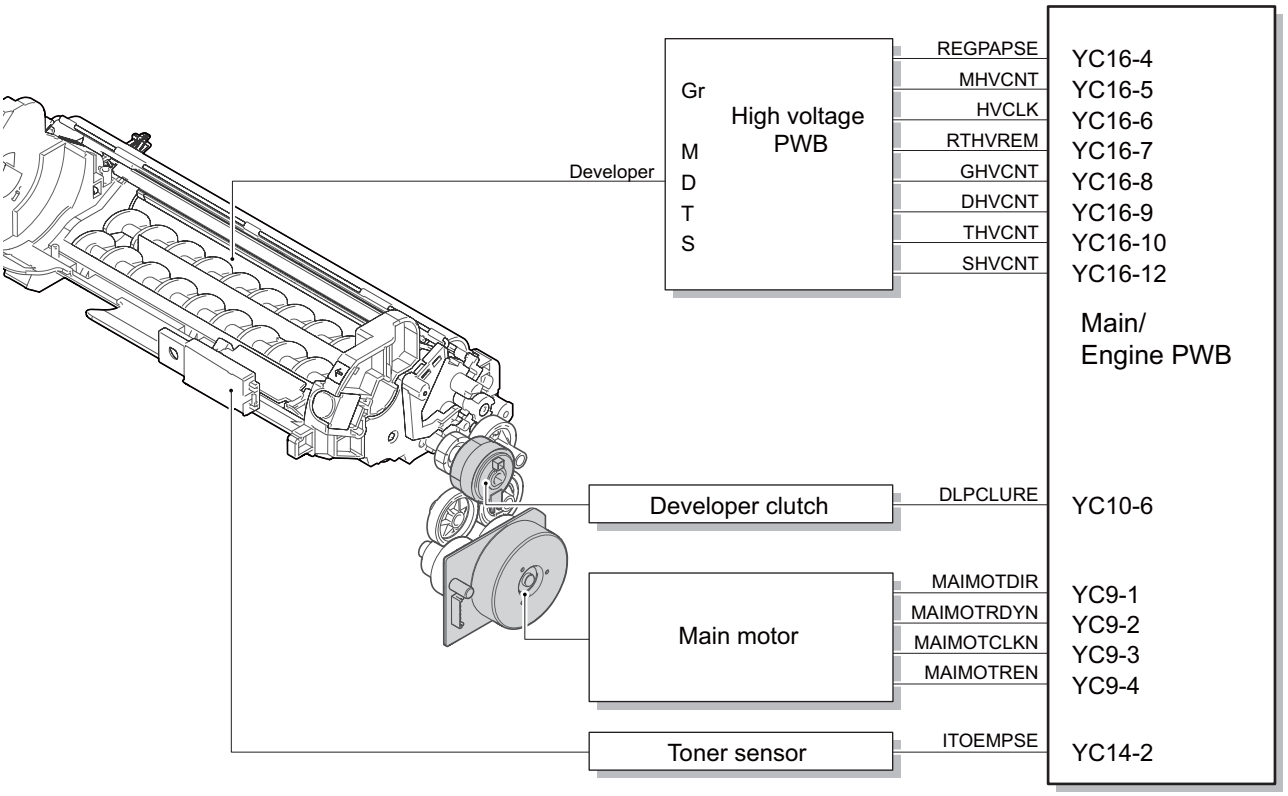

(4) Drum section

The drum section consists of the drum, the main charger roller unit, and the cleaning blade, etc. The drum surface is evenly charged to prepare forming the electrostatic latent image by emitting the laser beams.

(4-1) Main charger unit

The drum surface is evenly charged by the shield grid attached to the bottom of the unit.

(4-2) Cleaning

Remaining toner on the drum surface after transferring is removed by the cleaning blade, and collected to the toner container by the collecting roller. The eraser PWB consists of LED lamp, and it removes the remaining electric charge on the drum before the main charge.

[Components parts]

1. Drum
2. Main charger unit
3. Shield grid
4. Collecting roller
5. Cleaning blade
6. Drum roller
7. Eraser PWB
8. Flicker plate
9. Drum unit frame

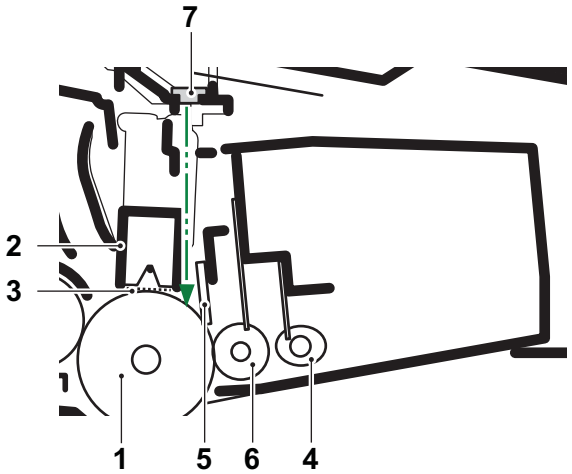

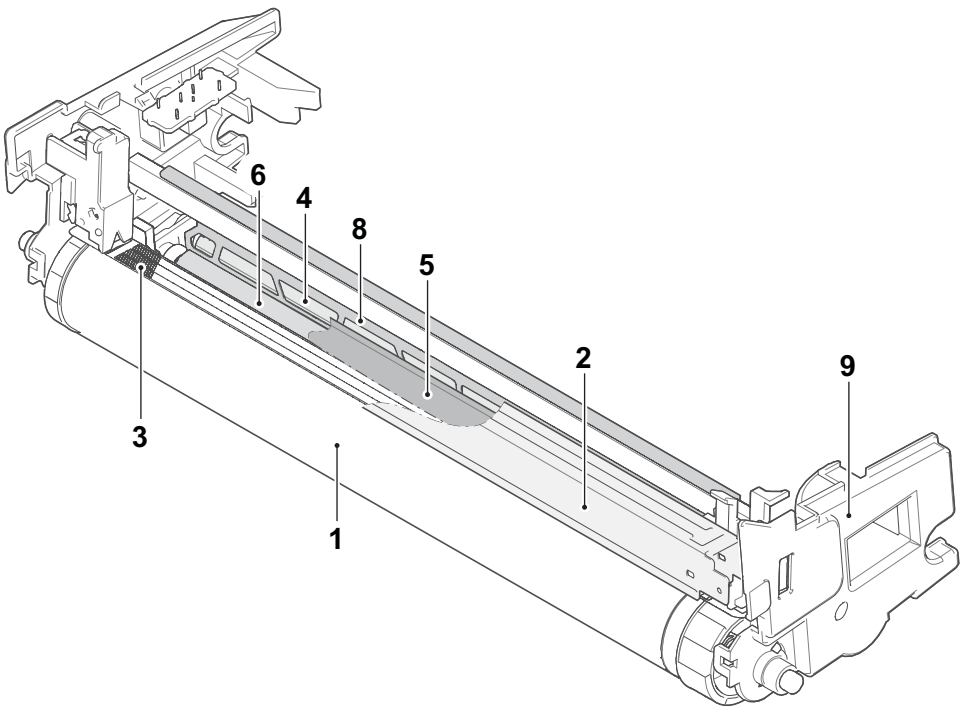

Block diagram

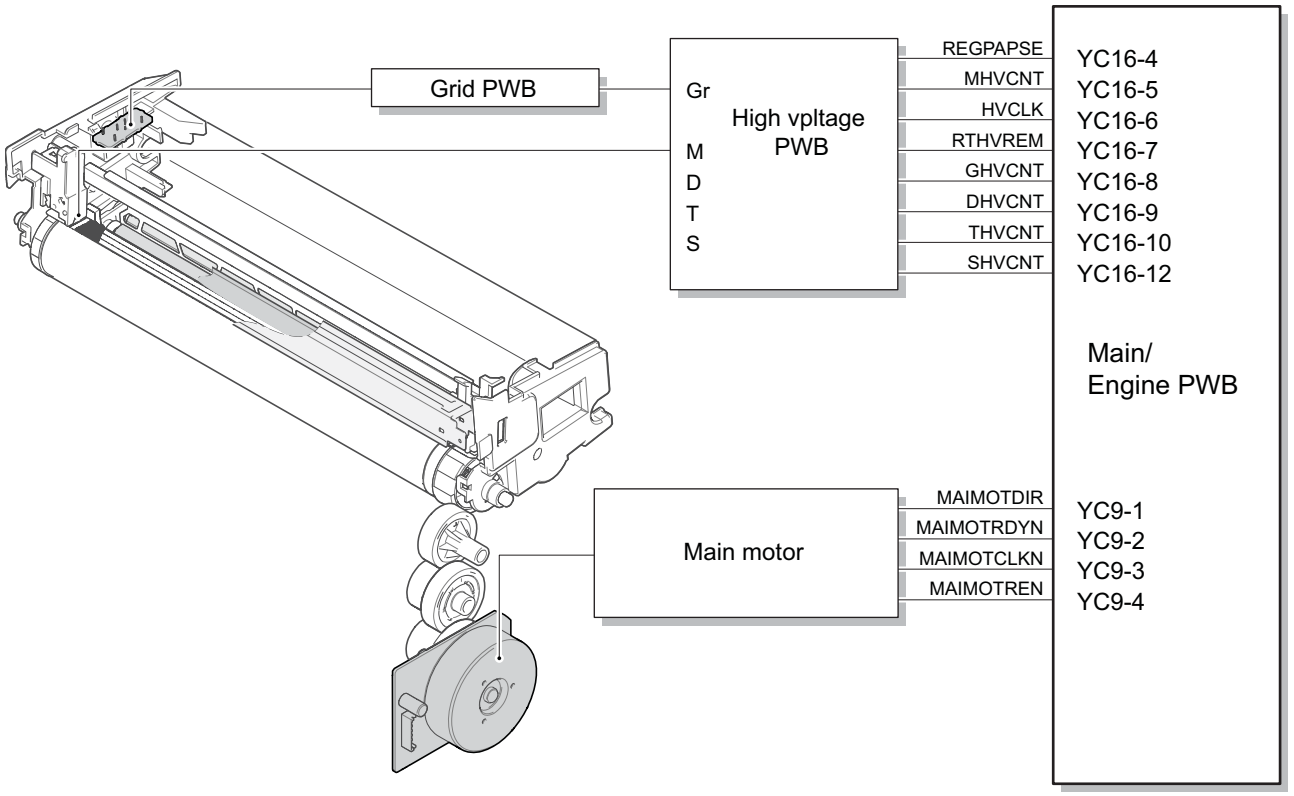

(5) Conveying/Transfer and Separation section

Conveying section conveys paper to the transfer and separation section after adjusting the paper position at the registration rollers.
The transfer and separation section consists of the transfer roller and separation needles attached to the paper conveying unit. The DC bias is impressed to the transfer roller by the high-voltage PWB (HVPWB), and the toner image formed on the drum is transferred to the paper by the potential gap. Then,, the paper is separated by the drum curvature separation. and discharged by the grounded separation brush *1
*1: 100V model applies DC voltage.

Components parts

1. registration roller
2. Registration pulley
3. Actuator
   (Registration sensor)
4. Transfer front guide
5. Transfer roller
6. Separation brush
7. Conveying guide
8. Drum

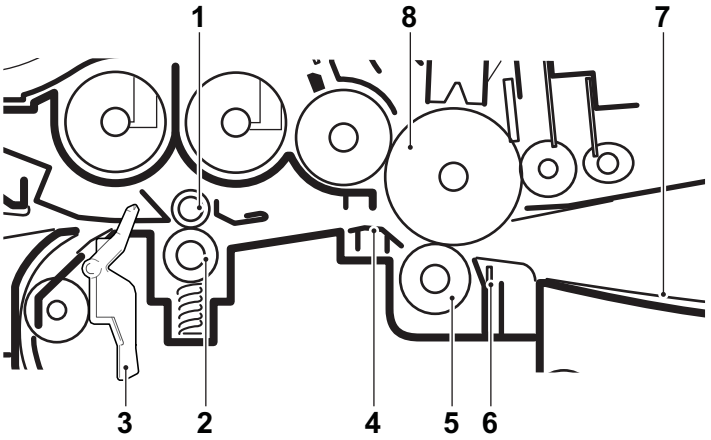

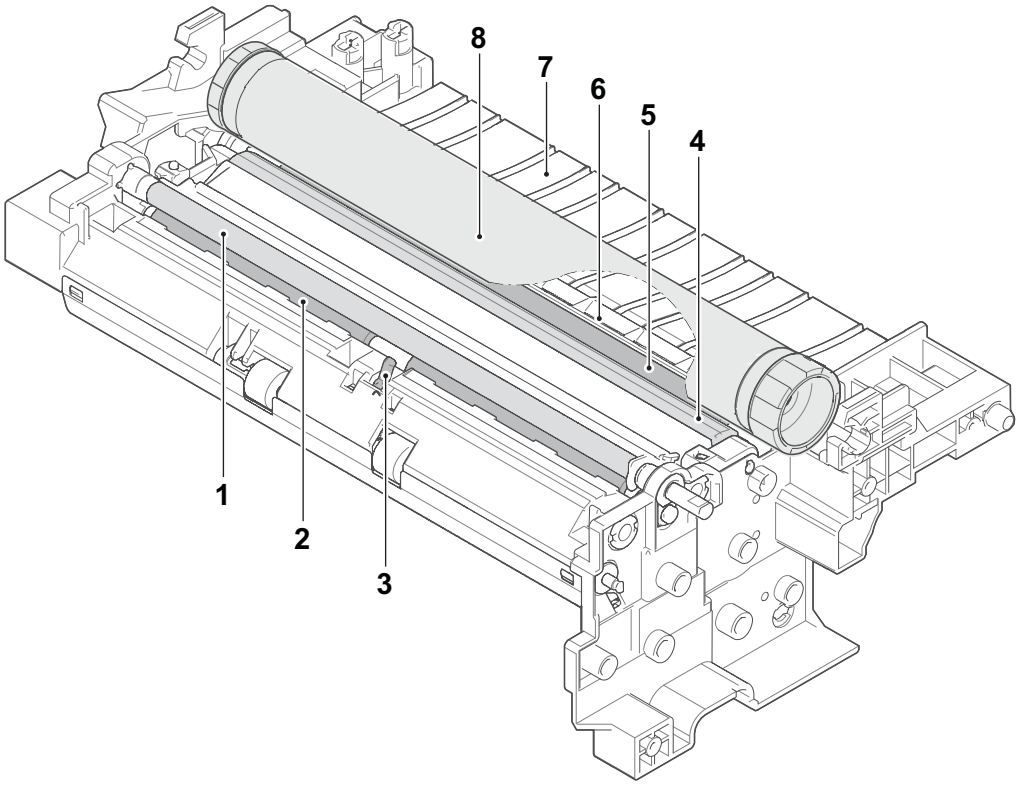

Block diagram

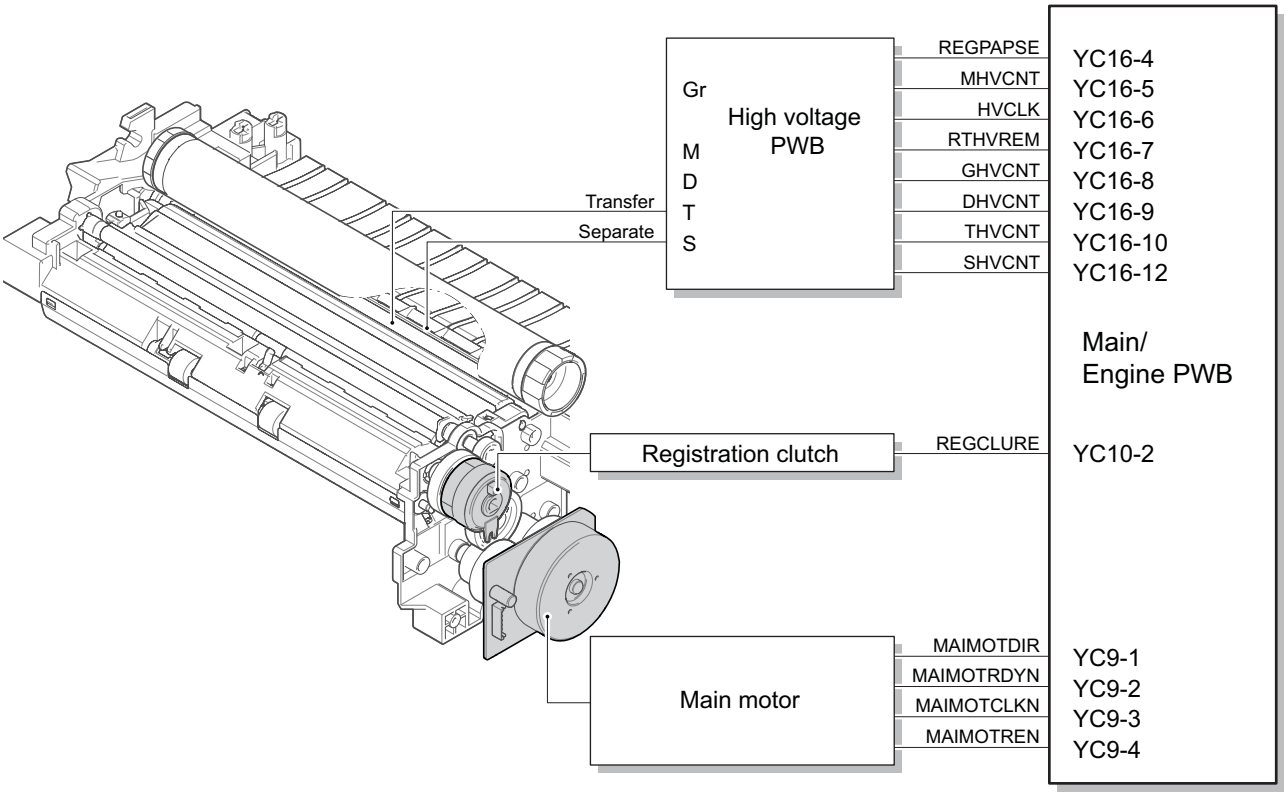

(6) Fuser section

Paper from the transfer and separation section is pinched between the fuser belt and the press roller. The fuser belt is heated by the fuser heater and pressed by the press roller pressed by the fuser pressure spring. The toner is fused on the paper with heat and pressure.

The surface temperature of the heat roller is detected by the fuser thermistor and controlled by the main/engine PWB. If the fuser section has abnormal high temperature, the power supply line is shut off by switching the fuser thermostat and the fuser heater is turned off forcibly.

Components parts

1. Fuser front guide
2. Fuser heater
3. Fuser belt
4. Fuser press roller
5. Thermopile
6. Fuser thermistor
7. Thermal cut-off
8. Actuator (Eject sensor)
9. Lower eject roller
10. Lower eject pulley

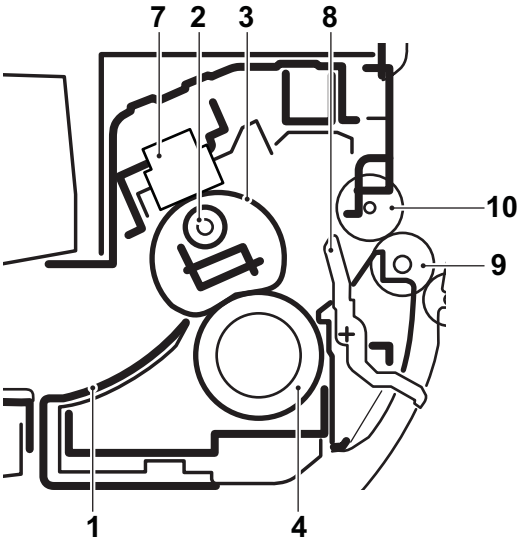

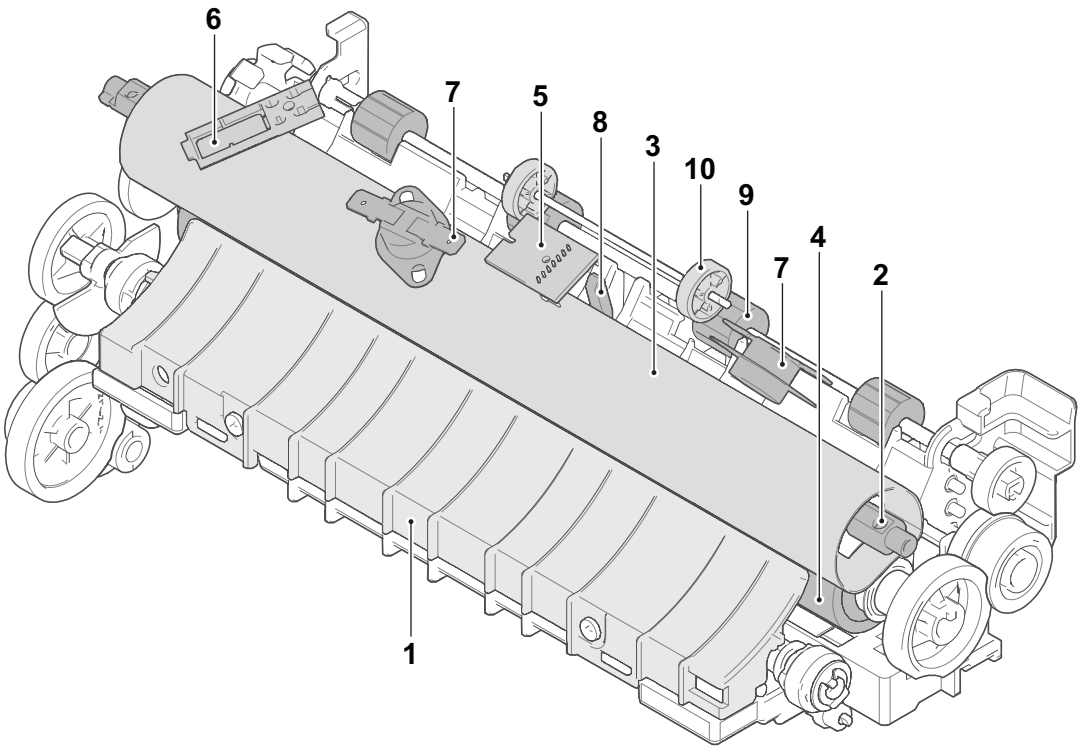

Block diagram

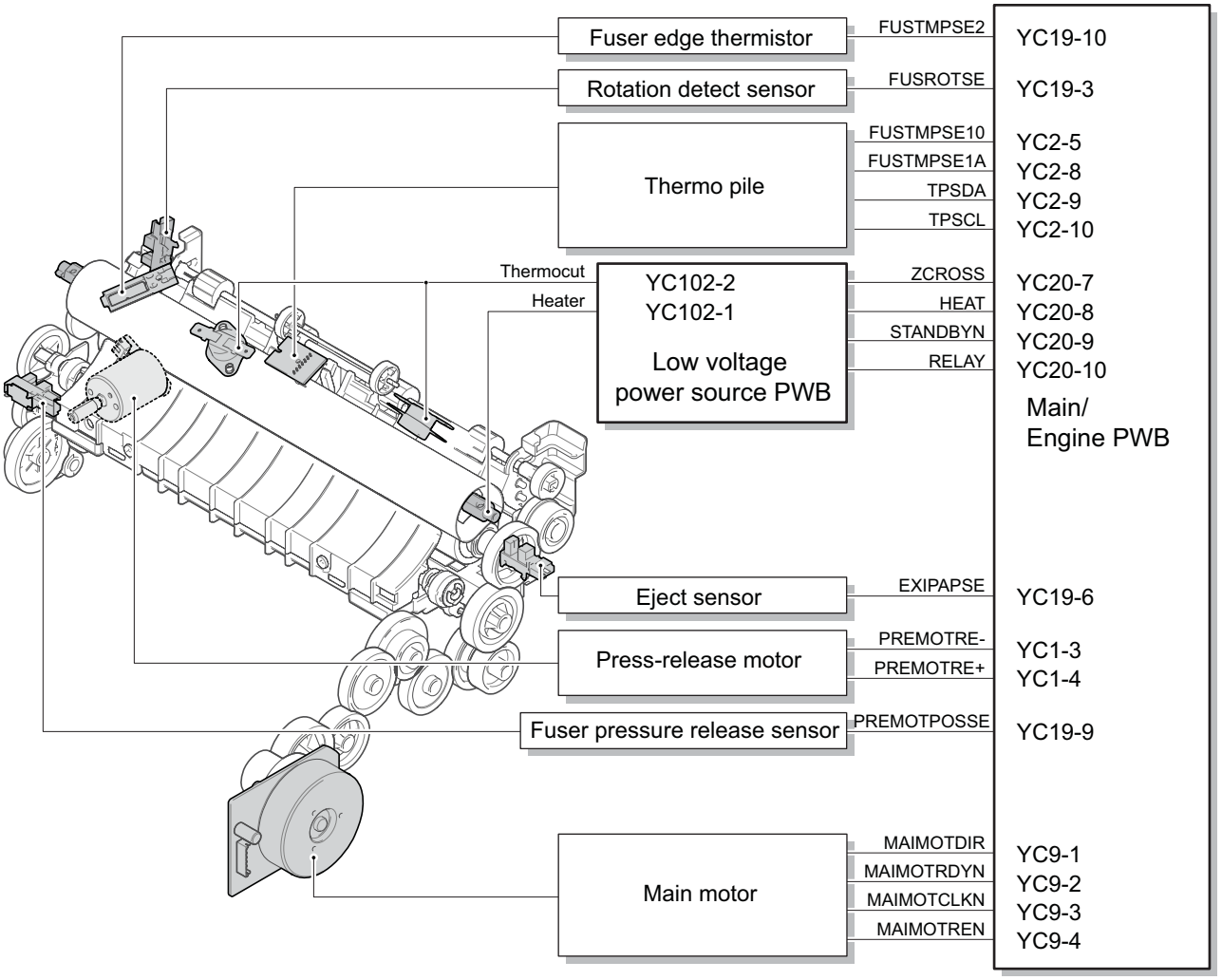

(7) Eject and feedshift section

The eject and feedshift section consists of the paper path from the fuser section to the inner tray or the duplex conveying section.

Components parts

1. Upper eject roller
2. Upper eject pulley
3. Eraser brush
4. FD guide
5. Eject lever
6. Lower eject roller
7. Feedshift pulley
8. Rear cover

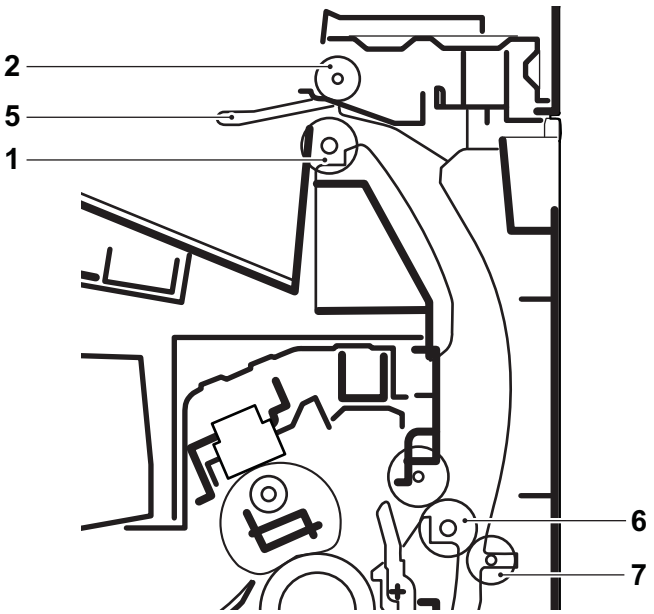

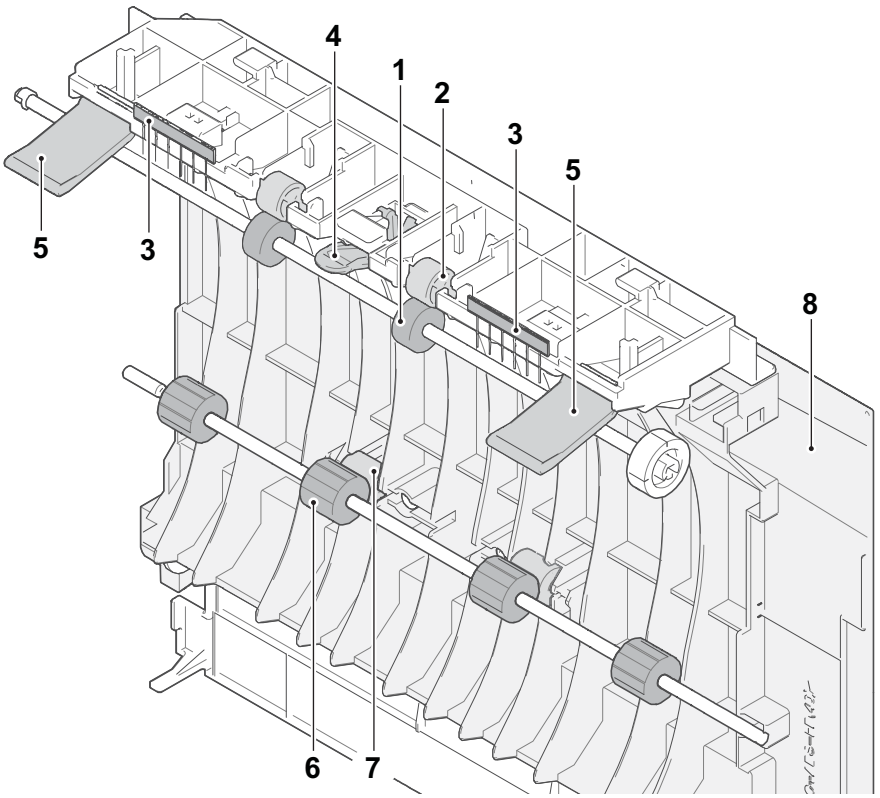

Block diagram

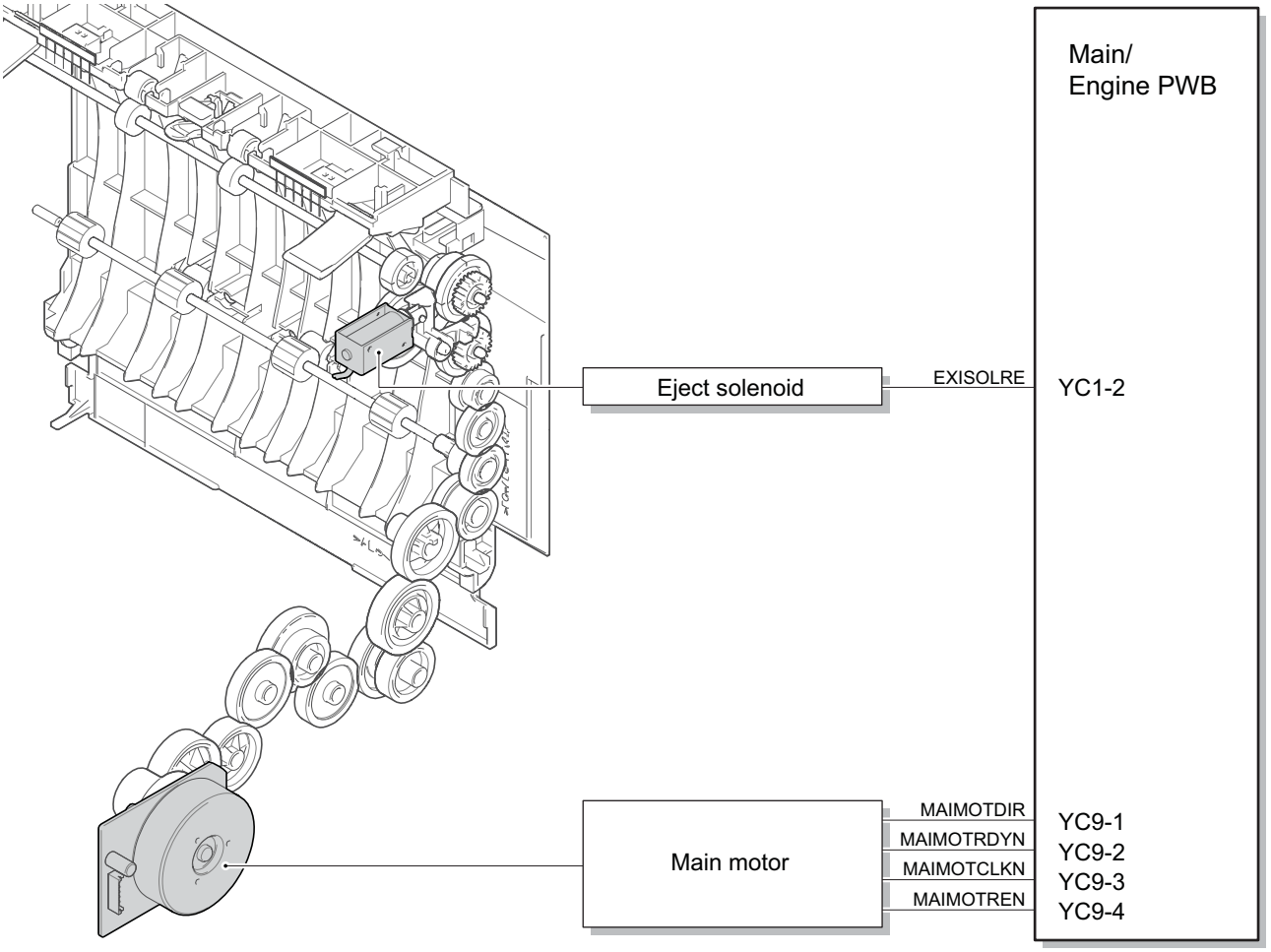

(8) Duplex conveying section

The duplex conveying section consists of the paper conveying path to forward the paper from the eject and feedshift section in the duplex print to the paper conveying section.

Components parts

1. Lower eject roller
2. Feedshift pulley
3. Actuator
   (Eject sensor)
4. DU conveying roller A
5. DU conveying pulley A
6. DU conveying roller B
7. DU conveying upper guide
8. DU conveying lower guide
9. DU conveying lever
10. Rear cover

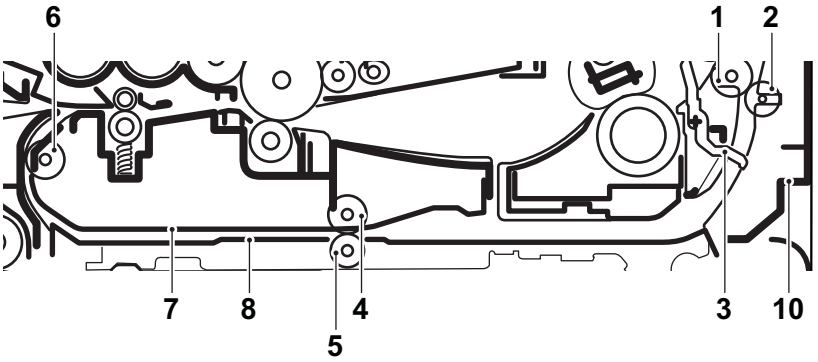

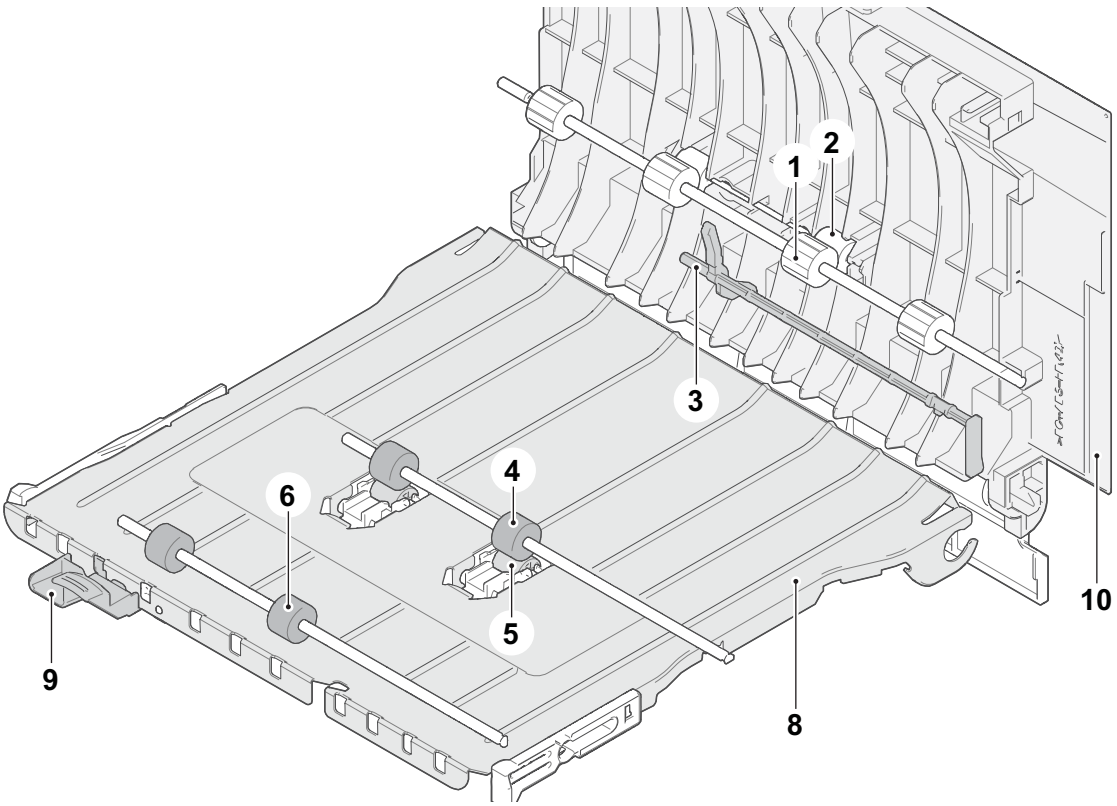

Block diagram

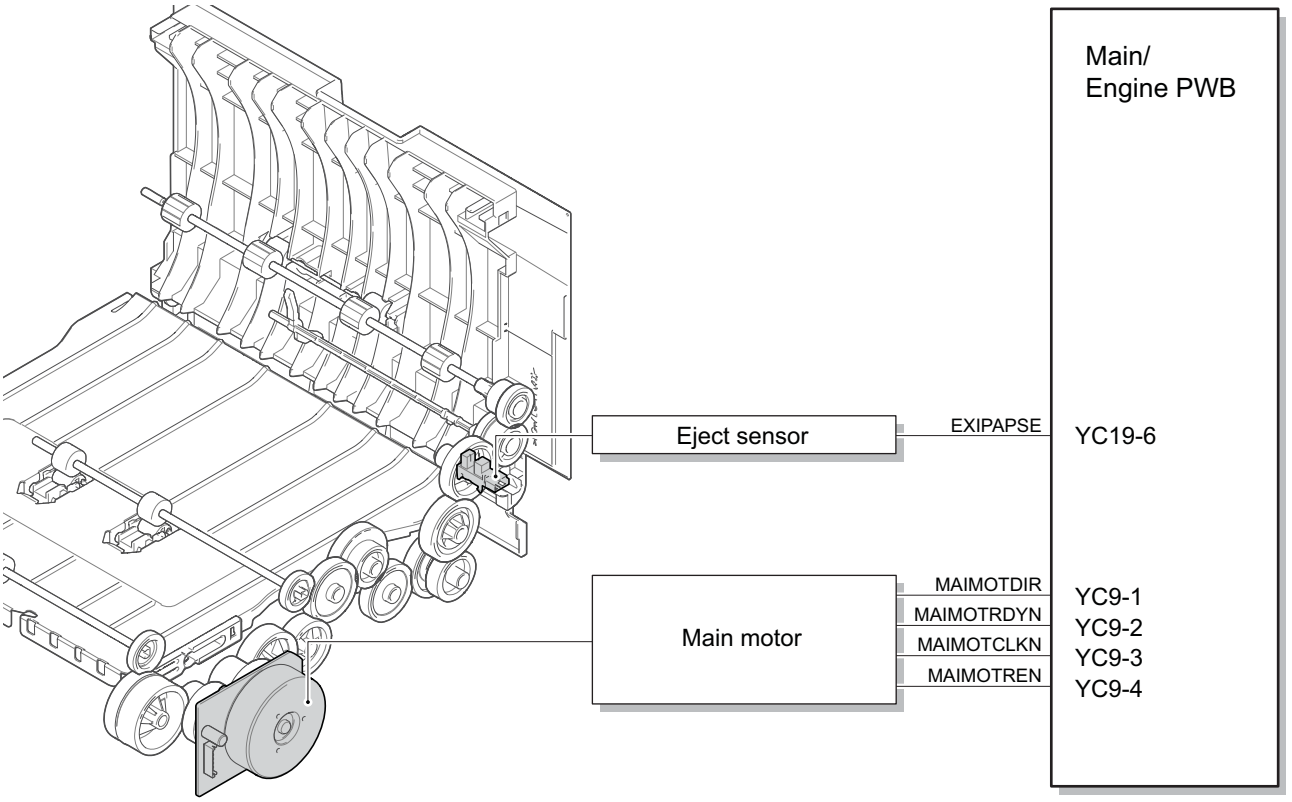

(9) Paper feeder (option)

The cassette can 300 sheets paper (64 g/m²) or 250 sheets paper (80 g/m²). Paper fed from the cassette is picked up by the rotation of the pickup roller and is conveyed to the main unit by the rotation of the paper feed roller and conveying roller. Multi-feeding is also prevented by the effect of the retard roller.

Components parts

1. PF paper feed roller
2. PF pickup roller
3. PF pickup holder
4. PF retard roller
5. PF conveying roller
6. PF conveying pulley
7. PF cassette bottom plate
8. PF friction pad
9. PF paper width guides
10. PF actuator (PF paper sensor)
11. PF paper length guide
12. PF cassette base
13. PF actuator (PF feed sensor)

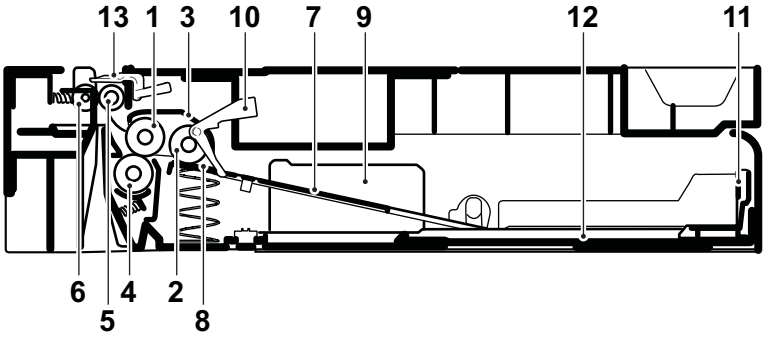

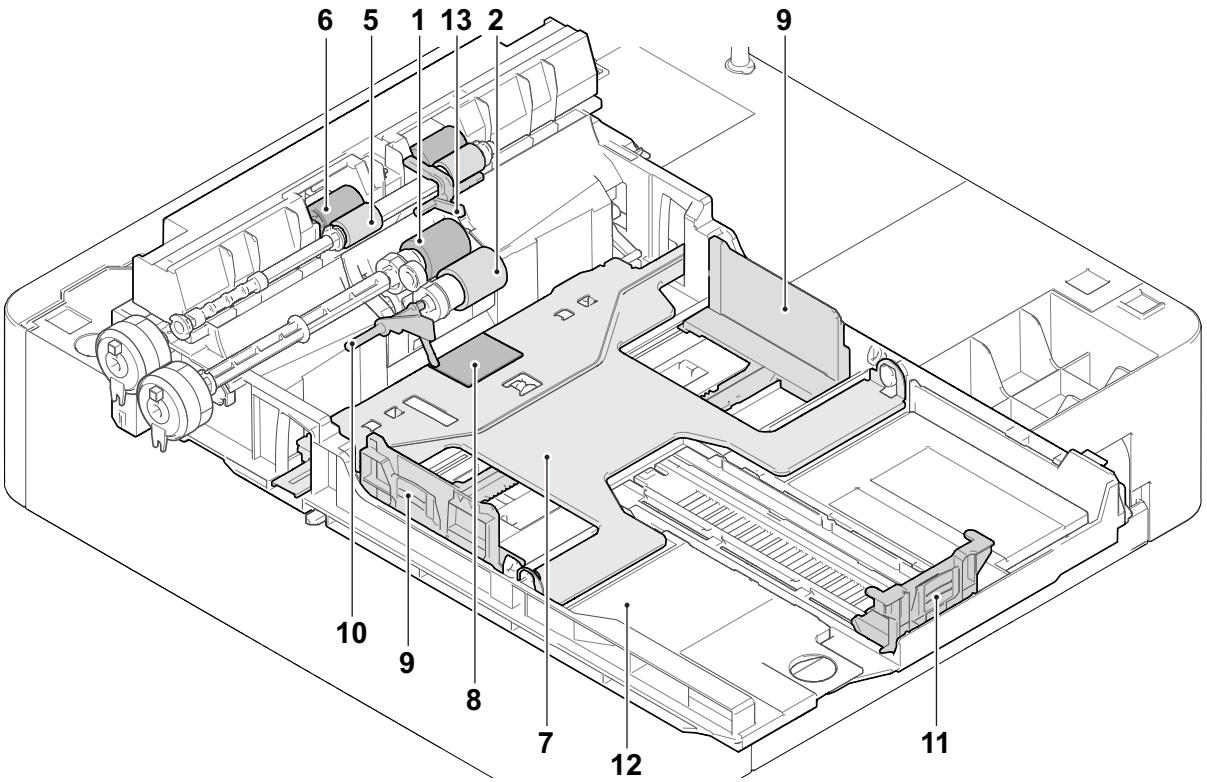

Block diagram

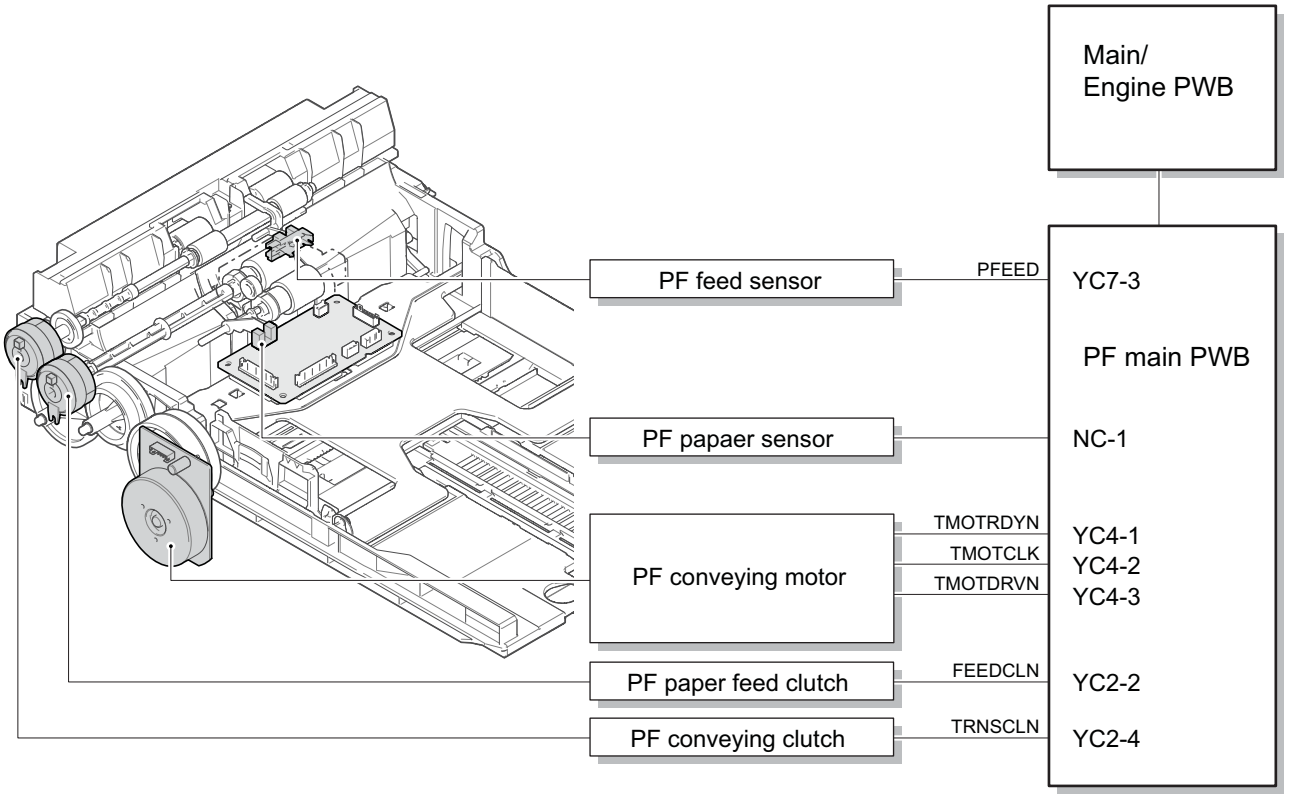

4 Maintenance

4-1 Precautions for the maintenance

(1) Precautions

Before disassembling the main unit, press the main power switch to turn the power off. Make sure that the power lamp on the operation panel is off and unplug the power cord from the wall outlet. Then, start the disassembly.
When handling the PWBs (printed wiring boards), do not touch parts with bare hands. Make sure not to damage the PWB.
If ICs are mounted on the PWB, do not touch them by hand or something charged with electrostatic.
Make sure to release the hook before disconnecting the connector with the hook.
Take care not to pinch up the wire and cable.
Use the original screws when reassembling the parts once disassembled.
If the types and the sizes of screws are not sure, refer to the parts list.

(2) Storage and handling of the drum

Note the following when handling and storing the drum.
When detaching the drum unit, never expose the drum surface to strong direct light.
Store in the place of ambient temperature of -20 to 40 degree C and ambient humidity of 85% RH or less.
Avoid storing the drum unit in the place where the temperature and humidity may suddenly change even if these changes are within the tolerable range.
Avoid exposure to any substance which is harmful or may affect the quality of the drum.
Do not touch the drum surface with any object.
Make sure not to touch the drum surface with bare hands or gloves.
If the drum is touched by hands or stained with oil, clean it.

(3) Storage of the toner container

Store the toner container in a cool, dark place.
Do not place the toner container under direct sunshine or in a damp environment.

(4) Screening of the toner container

Look at the screening film on the brand protection seal affixed to the toner container through the windows of the validation viewer.
Look at the screening film through two windows to check the genuineness.

A black-colored band when seen through the the anti-counterfeit film portion left side window (● mark).
A shiny or gold-colored band when seen through the anti-counterfeit film portion right side window (☼ mark).

When seen as the above, it is genuine. Otherwise (e.g. both seen in gold), it is a counterfeit.

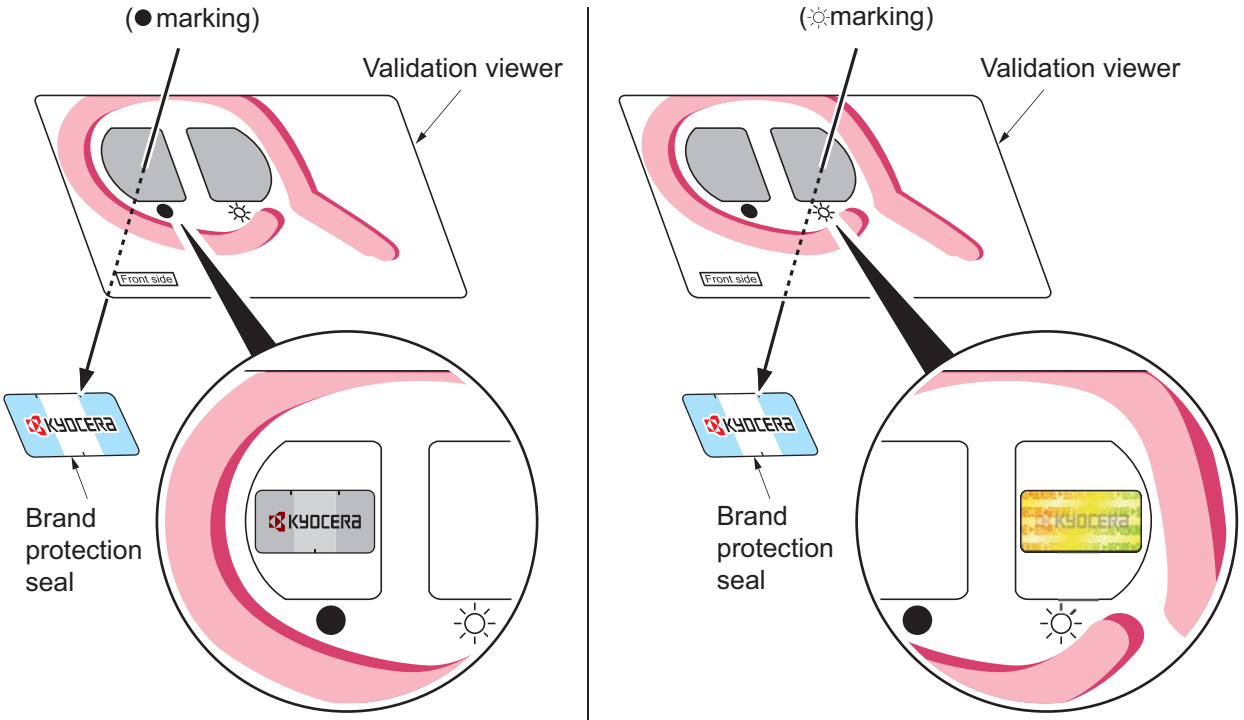

A black-colored band when seen through the left side window

A shiny or gold-colored band when seen through the right side window

The anti-counterfeiting film portion has three slits as the figure below and it can not reused.

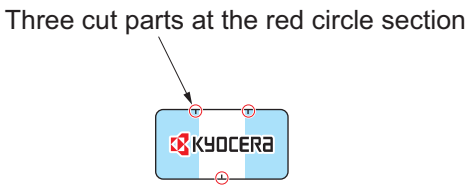

4-2 Maintenance parts

(1) Maintenance kits

Maintenance part name		Part No.
Name used in service manual	Name used in parts list	
MK-1200 (100,000 image)	MK-1200/MAINTENANCE KIT DRUM UNIT Developer unit	1702VP0RU0

(2) Executing the maintenance mode after replacing the maintenance kit

After replacing the above maintenance kit, execute the following maintenance modes from [menu] key.

Item	Content
New Developer	Developer powder initial setting *1
Maintenance	Maintenance counter clear

*1 Only when replacing the developer unit with the new one

(3) Maintenance parts list

Maintenance part name		Part No.
Name used in service manual	Name used in parts list	
Pick up roller Paper feed roller (Paper feed roller assembly)	PULLEY PICKUP ASSY PULLEY FEED ASSY (PARTS HOLDER FEED ASSY SP)	302HN0608_ 302F90623_ (302RV9407_)
MP paper feed roller	ROLLER M/P ASSY	302HS0826_

(4) Periodic maintenance Procedures

CH:Check / CL:Clean / AD:Adjust / LU:Lubrication / RE:Replace

	Parts name	Parts No.	PM maintenance (x1000 counts)			Remark
			Set UP	User Call	100	**Please do not use spray containing flamable gas for air-blow or air-brush purposes.**
1	IMAGE QUALITY	---	CH AD	CH AD	CH AD	
2	MK-1200	1702VP0RU0			RE	Drum unit, Developer unit
3	INSIDE OF MACHINE	---		CL	CL	Vacuum: In particular, remove toner and paper dust around imaging and conveying section.
4	PULLEY PICKUP ASSY PULLEY FEED ASSY	302HN06080 302F906230		CL	CL	Alcohol or dry cloth if no replacement.
5	ROLLER M/P ASSY	302HS08260		CL	CL	Alcohol or dry cloth if no replacement.

4-3Maintenance parts replacement procedures

When it is necessary to replace parts is needed due to malfunction, etc., replace the service parts in the following procedures.

(1) Cassette paper feed section

(1-1)Detaching and reattaching the Paper feed roller

Procedures

1. Pull out the cassette (a) from the main unit (b) in the direction of the arrow, and detach it.

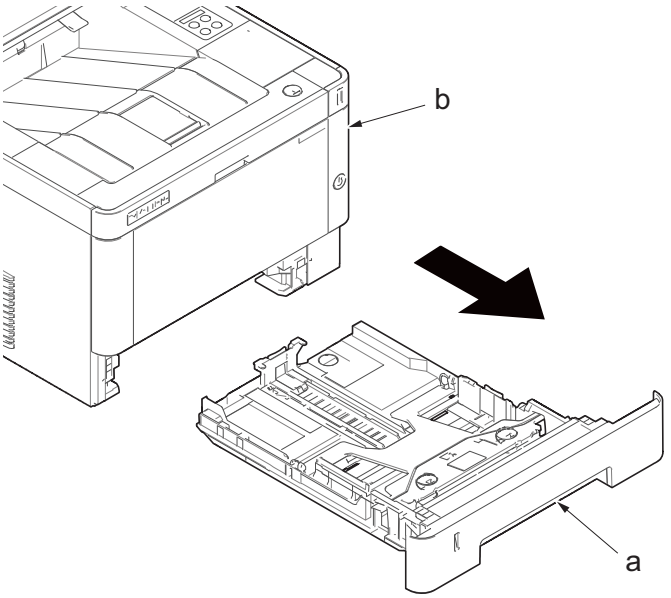

2. Pull the lever (b) of the paper feed roller assembly (a) toward you and release the lock.
3. Slide the paper feeder roller assembly (a) while settingg it upright and detach it from the paper feeder roller shaft (c).
4. Detach the paper feeder roller assembly (a) toward you.

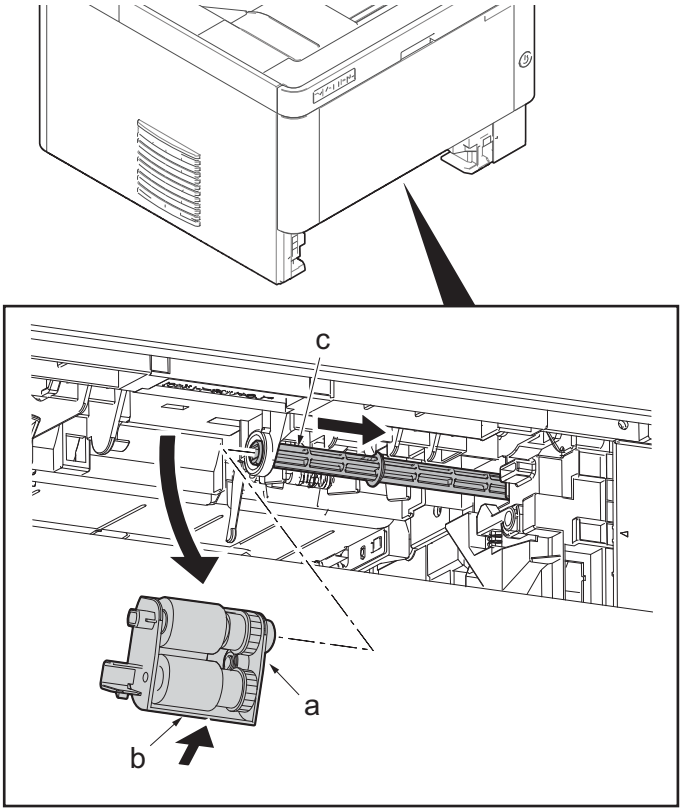

5. Check or replace the paper feeder roller assembly (a) (paper feed roller, pick up roller), and then reattach the parts in the original position.

Attention: When reattaching to the paper feed roller assembly (a), make sure to align the head (c) of the feed shaft (b) to the oval (d) of the paper feed roller assembly.

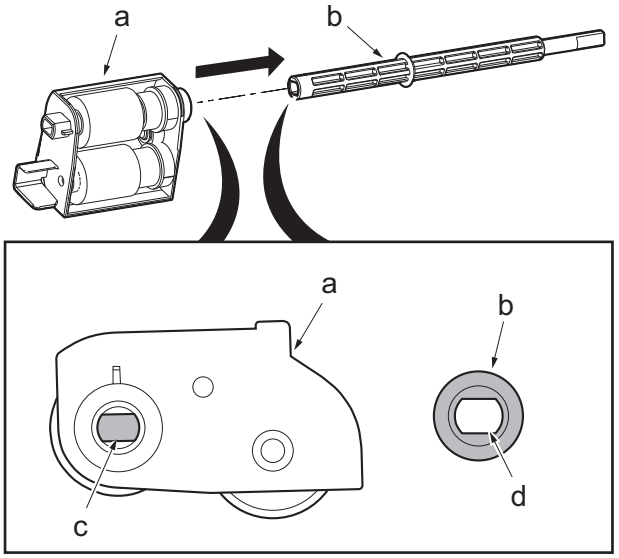

(1-2)Detaching and reattaching the retard roller

Procedures

1. Detach the cassette (a).
2. Release two hooks (b) from the back side of the cassette and detach the retard roller assembly (c).

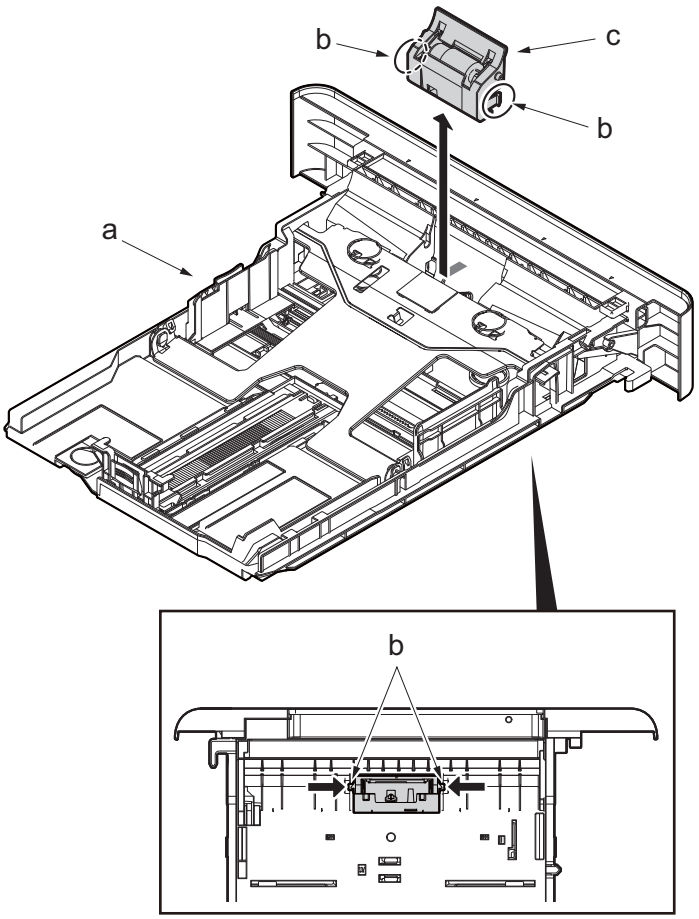

3. Detach the retard roller (b) from the retard roller assembly (a).

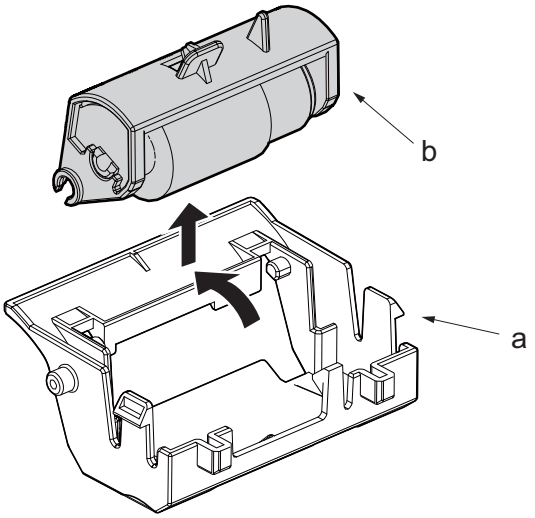

4. Check or replace the retard roller, reattach the detached parts in the original position.

Attention: When attaching the retard roller assembly (a), make sure to attach the spring (c) to the protrusion (b) of the retard roller assembly.

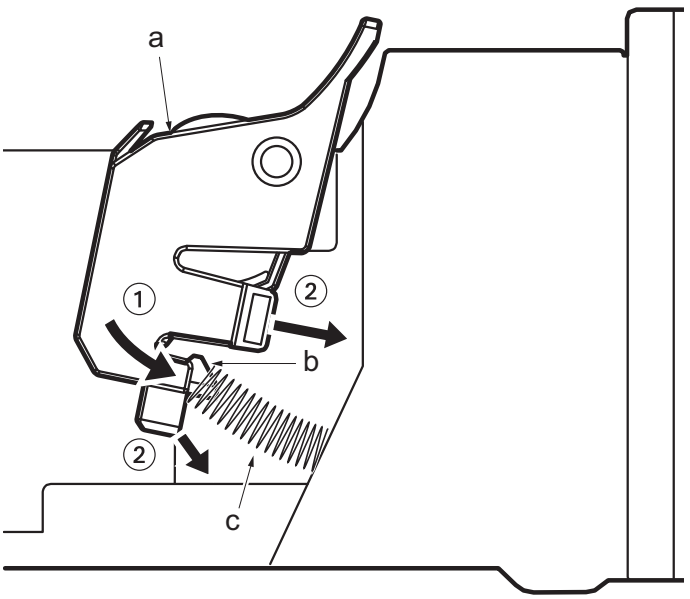

(1-3)Detaching and reattaching the MP paper feed pulley

Procedures

1. Slightly pull out the cassette
2. Open the rear cover (a).
3. Open the cassette cover (c) and release the hook (d) of the left rear cover (b) in the direction of the arrow.
4. Twist the rear left cover (b) to release the hook (e) and detach it.

Attention:
The direction of hook (d) or (e) is reverse. Pay attention to the damage when detaching.

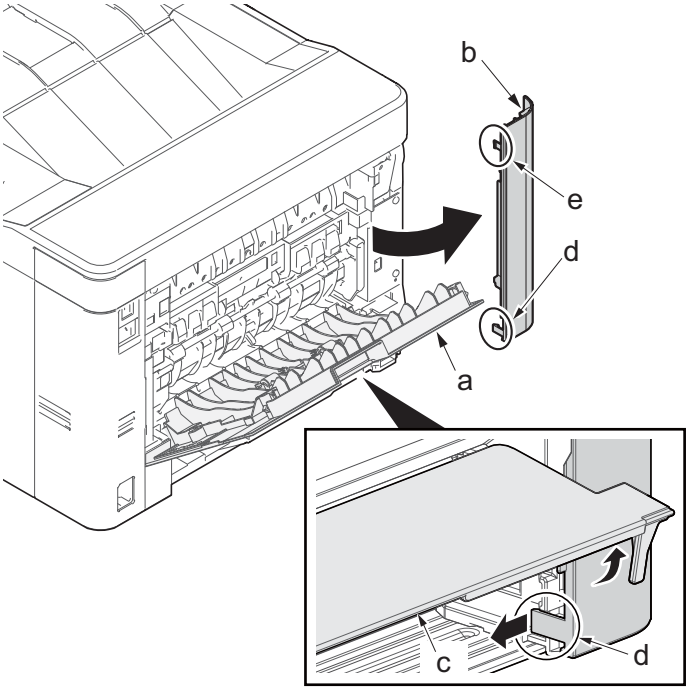

5. Detach the right rear cover (a) while twisting it.
6. Remove the screw(M3×10TP)(b).
7. Release the protrusion (e) by using a flat-blade screwdriver (d).
8. Detach the Wi-Fi cover(c).

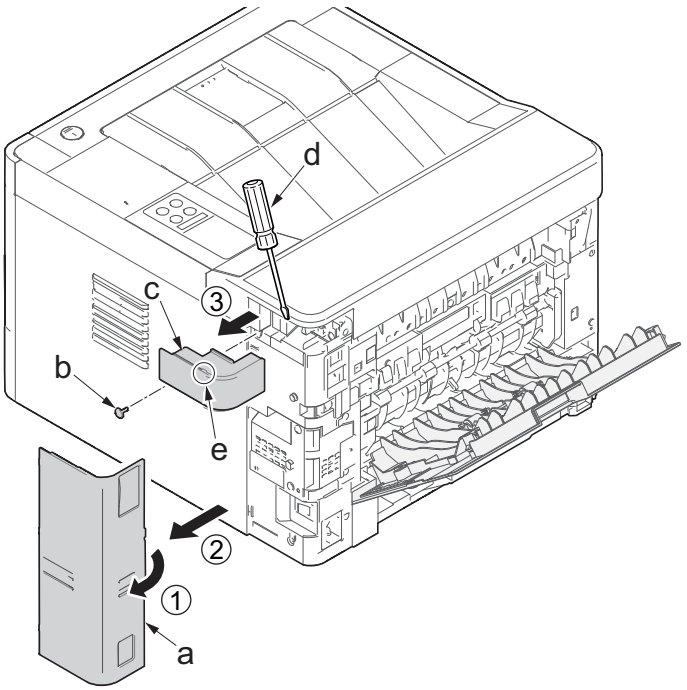

9. Remove two screws(M3×10TP)(a).
10. Release two hooks (b) of the upper rear cover(c) and detach it.

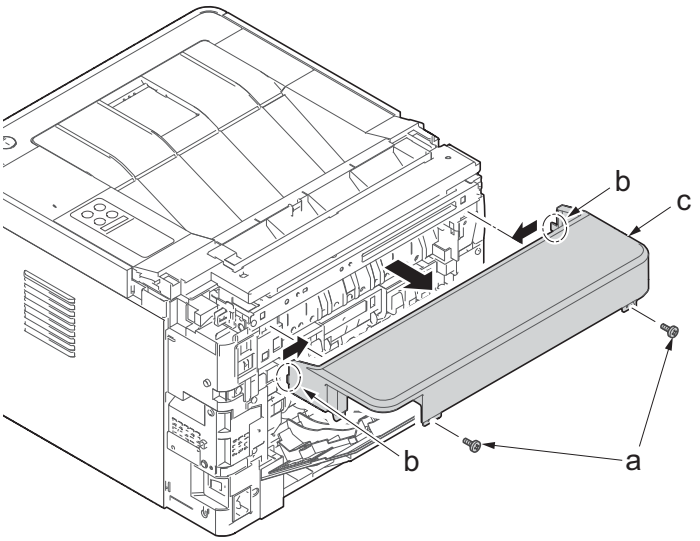

11. Pull out the cassette
12. Open the front cover (a).
13. Twist three hooks (b) at the rear side of the right cover (a) to detach it.
14. Release two hooks by using a flat-head screwdriver (c).

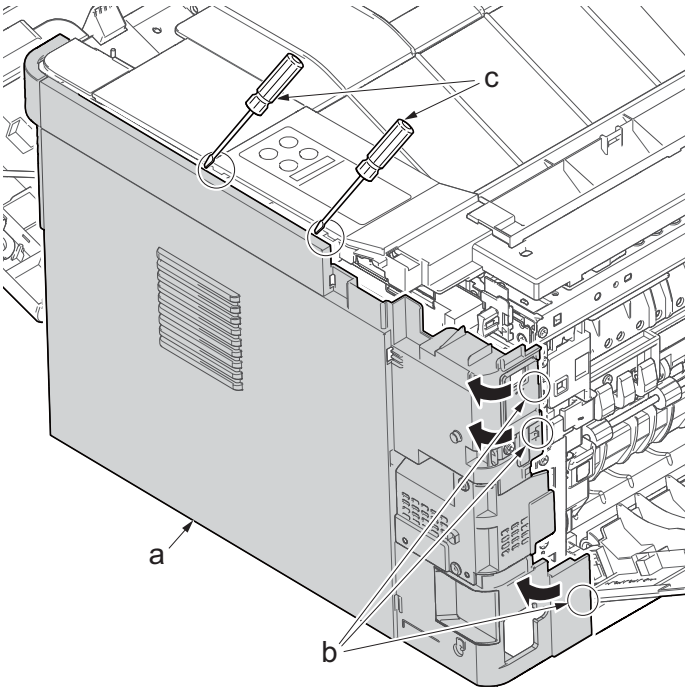

15. Release three hooks by using a flat-head screwdriver (d).
16. Twist two hooks (c) at the front side of the right cover (b) to release them and detach the right cover (b).

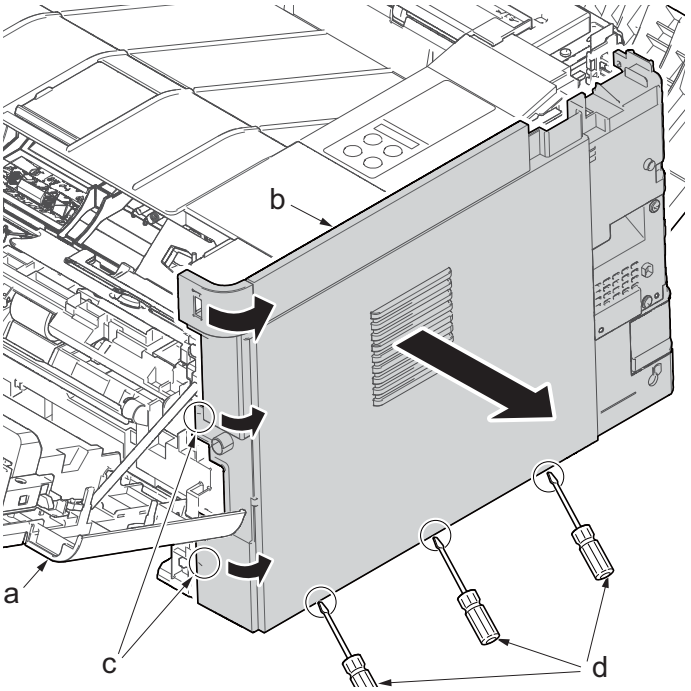

17. Disconnect the connector (b) from the main PWB (a).
18. Detach the wires (d) from the hooks of the wire guides (c).

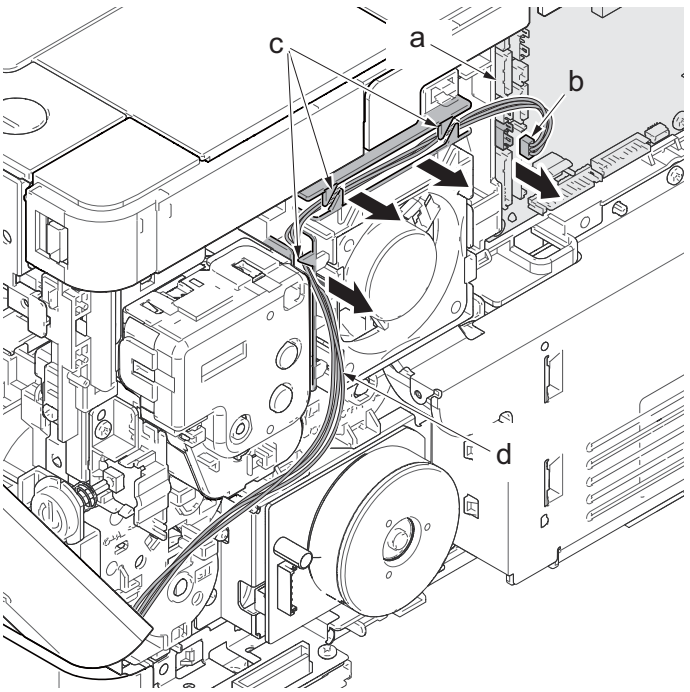

19. Open the front cover (a) and detach two straps (b) by using pliers (c).

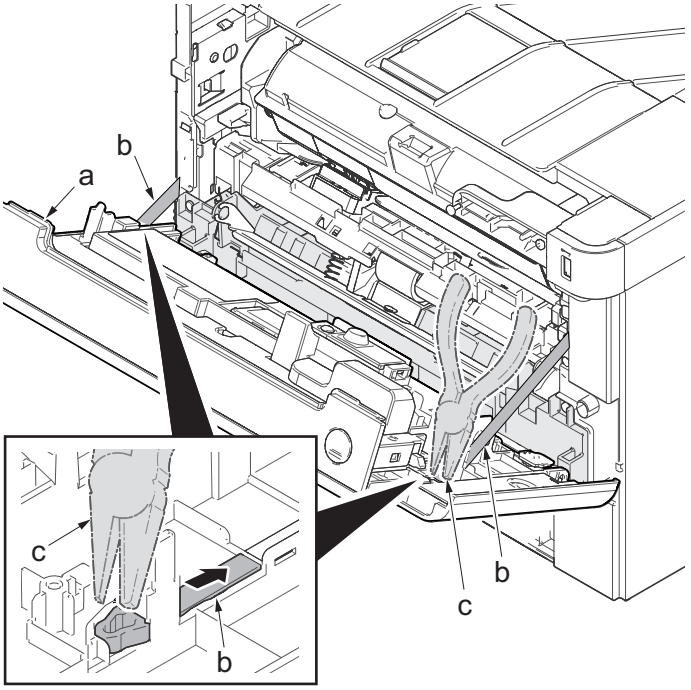

20. Open the front cover (a) to the bottom and detach the left side of cover fulcrum from the fulcrum shaft (b).
21. Release the right side of fulcrum portion (c) and detach the front cover (a).

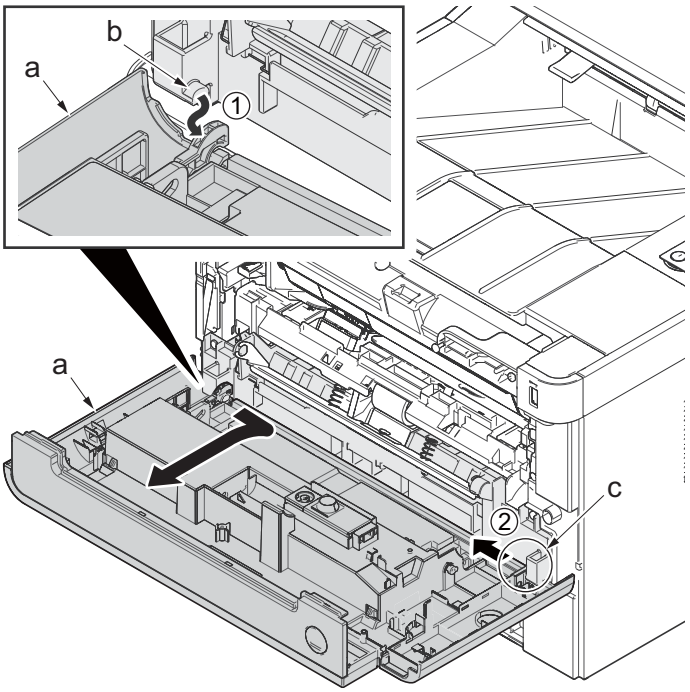

22. Remove four screws(M3x8S tight)(a), detach MP below frame(b).

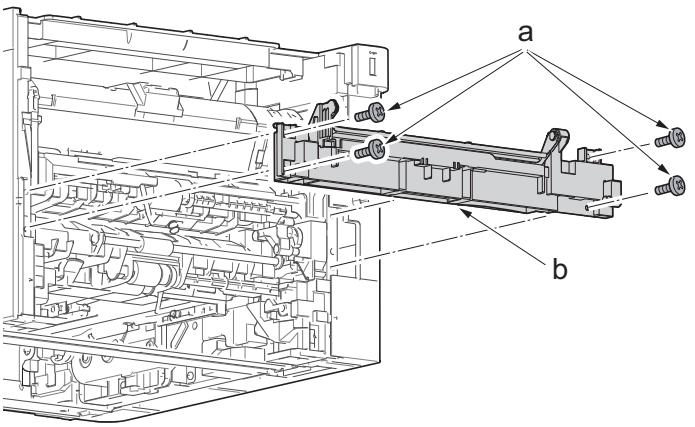

23. Pull the lock lever and the slide the paper feed roller shaft (b) to the right.
24. Detach the paper feed pulley (c).
25. Check or replace the paper feed pulley (c), and then reattach the parts which are detached in the original position.

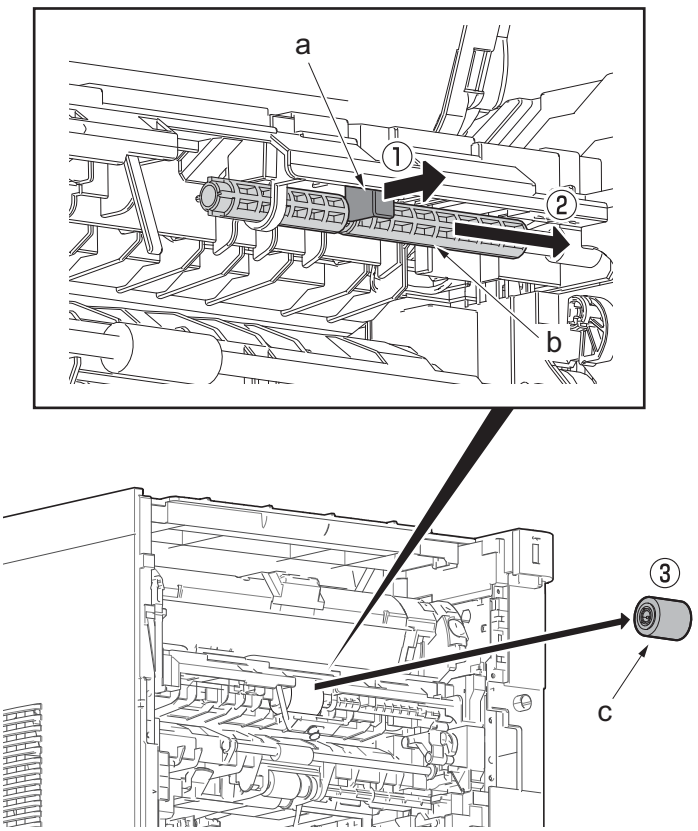

*: When attaching the paper feed pulley, locate it so that the cross notch lies at the right side viewed from front.

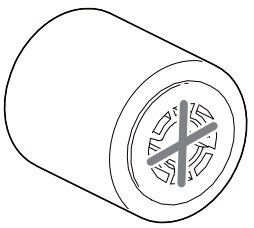

(2) Developer section

(2-1)Detaching and reattaching the developer unit

Procedures

1. Open the front cover (a).
2. Open the top cover (b).

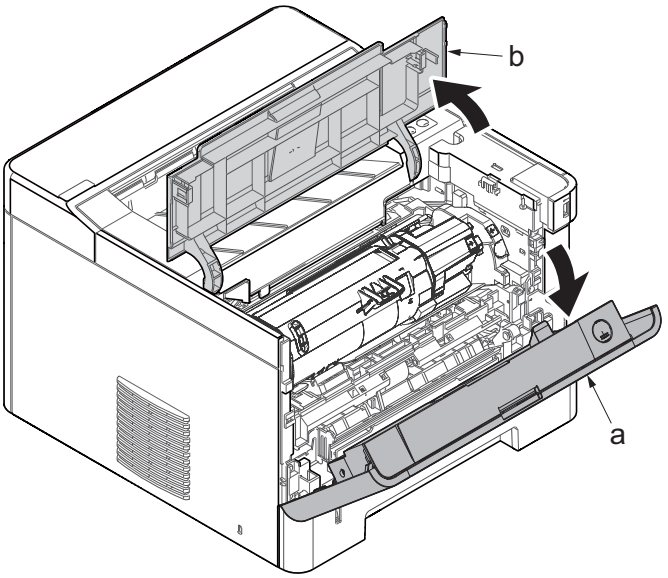

3. Push down the developer release lever (b).
4. Detach the developer unit (a).
5. Check or replace the developer unit (a), and then reattach the parts which are detached in the original position.

Attention:
Execute the following maintenance modes when replacing the maintenance kit.

(LED model)
Installing the toner installation mode
(See page 6-4)
Maintenance counter preset
(See page 6-4)

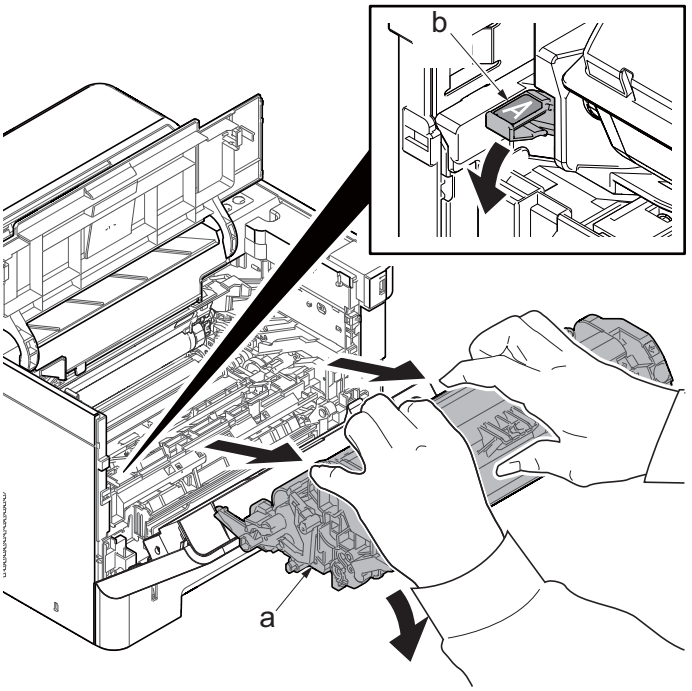

(3) Drum section

(3-1)Detaching and reattaching the drum unit

Procedures

1. Open the front cover (a).
2. Open the top cover (b).

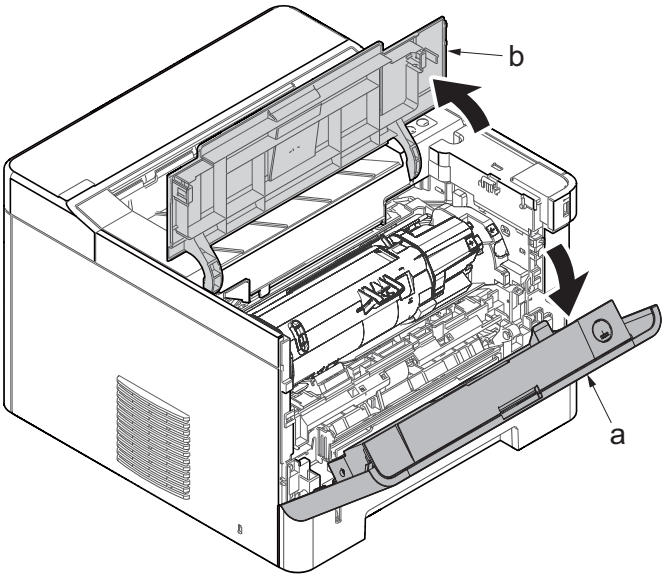

3. Push down the developer release lever (b).
4. Detach the developer unit (a).

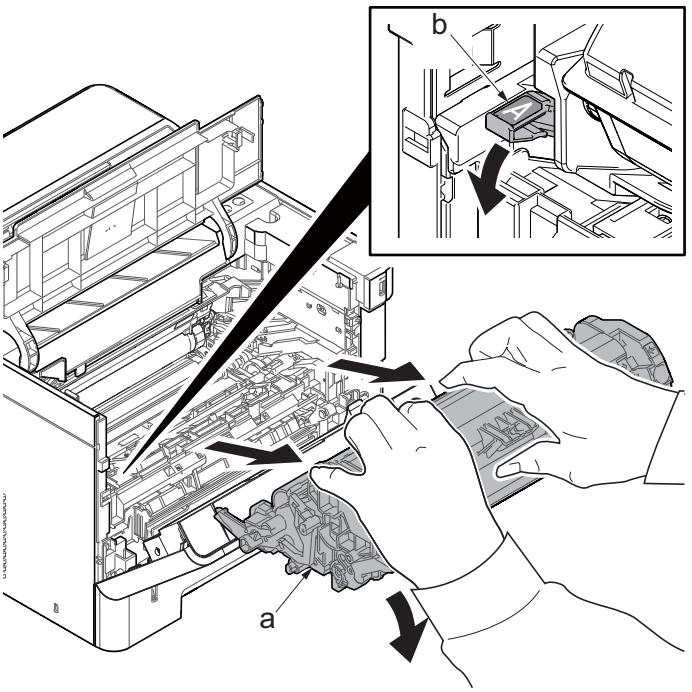

5. Detach the drum unit (a).
6. Check or replace the drum unit (a), and then reattach the parts which are detached in the original position.

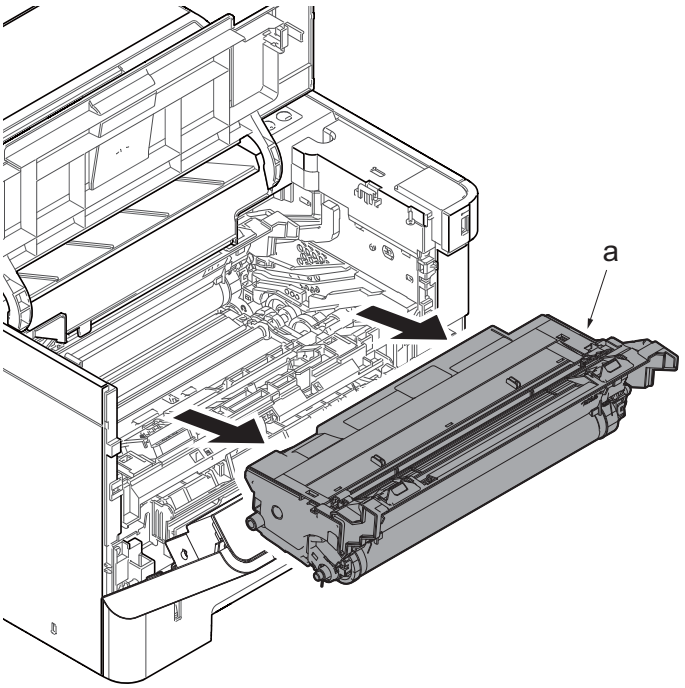

Attention:
Execute the following maintenance modes when replacing the maintenance kit.

(LED model)
Maintenance counter preset
(See page 6-4)

(3-2)Detaching and reattaching the main charger unit

Procedures

1. Remove the tape (b) from the drum unit (a).
2. Open the eraser cover (c)

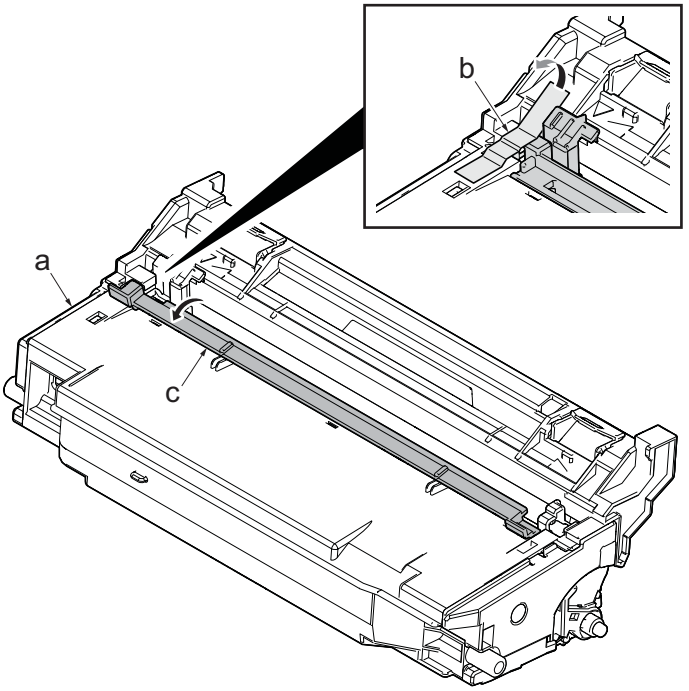

3. Push the edge (a) of the main charger unit and slide it.
4. Lift up the main charger unit (b) and detach it.
5. Check or replace the main charger unit (b), and then reattach the parts which are detached in the original position.

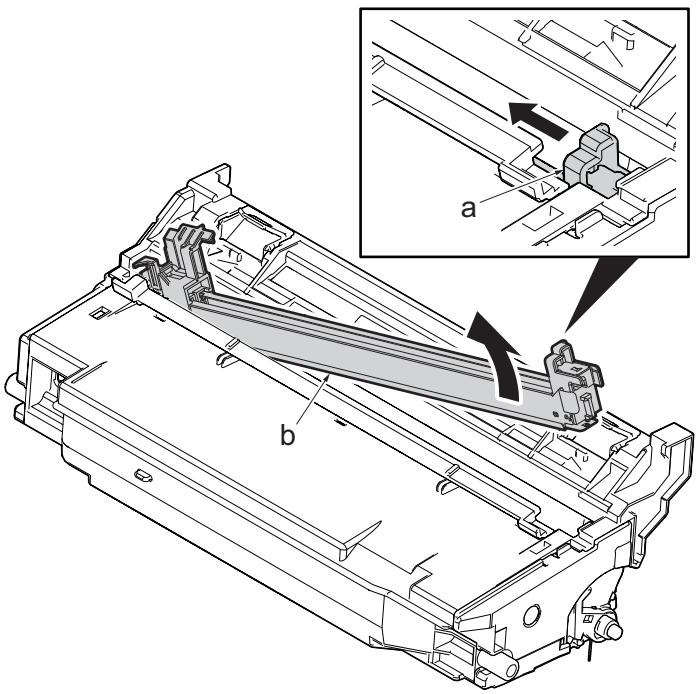

(4) Transfer section

(4-1)Detaching and reattaching the transfer roller unit

Procedures

1. Open the front cover (a).
2. Open the top cover (b).

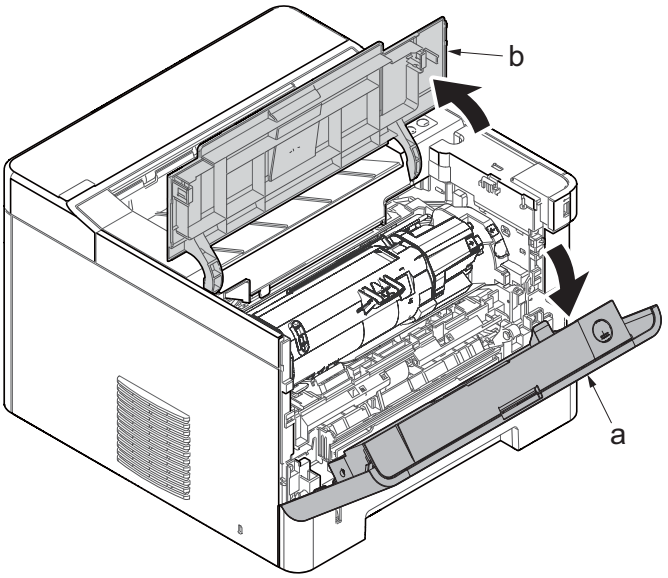

3. Push down the developer release lever (b).
4. Detach the developer unit (a).

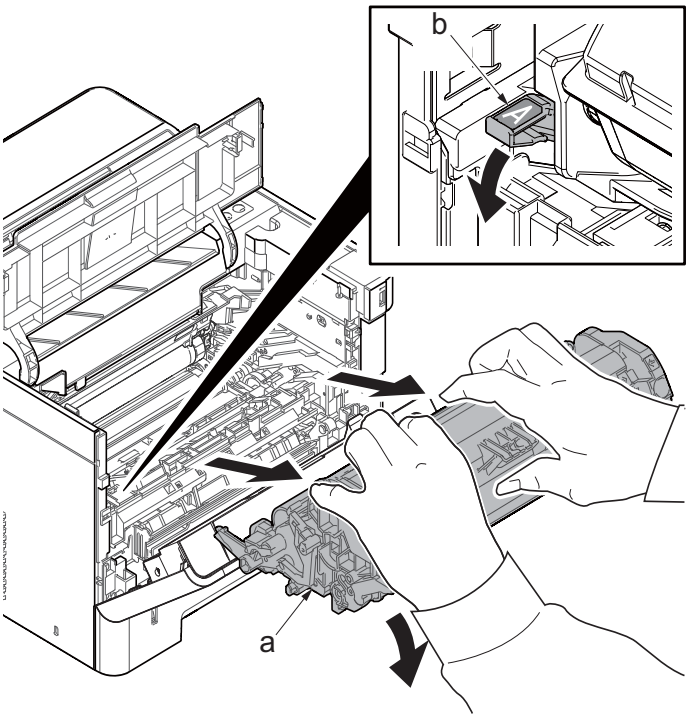

5. Detach the drum unit (a).

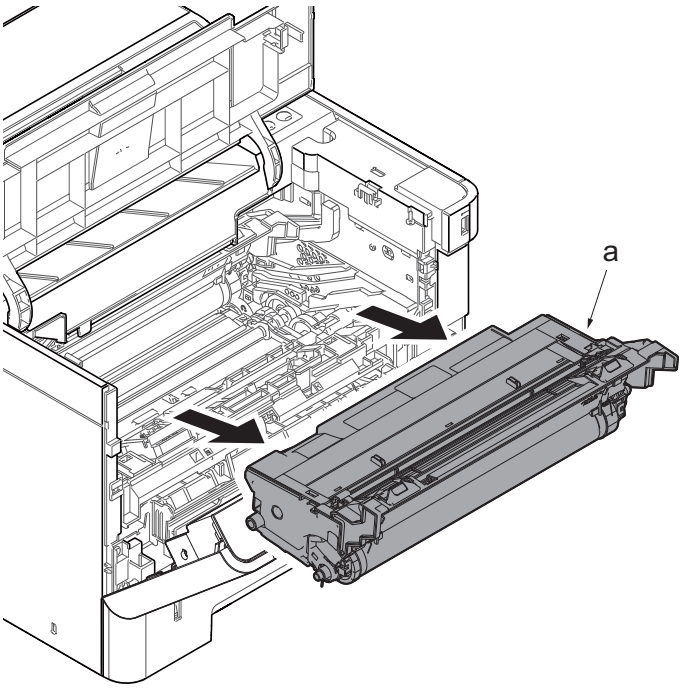

6. Slide the transfer front guide (b) while pressing the release lever (a) and release the hook (c).
7. Remove the transfer front guide (b).

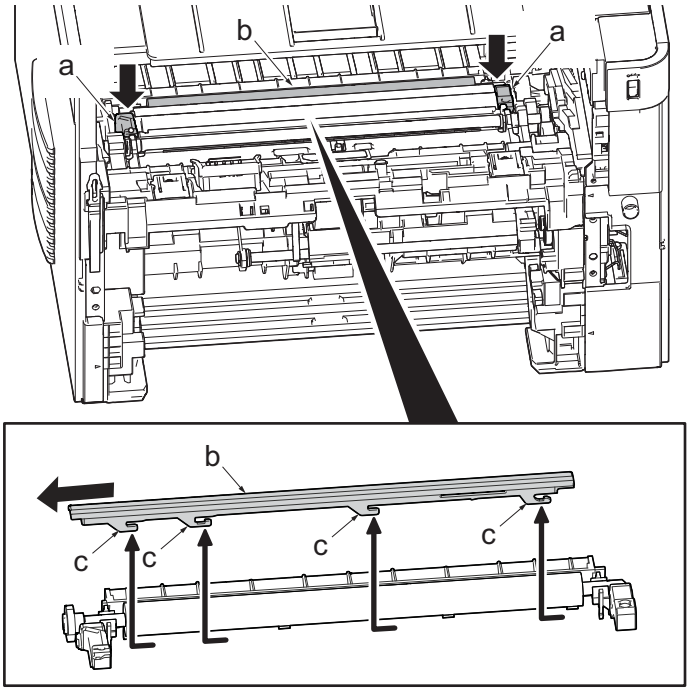

8. Remove the shaft (b) of transfer roller (a) from two transfer bushings (c).
9. Remove the gear Z17 (d) from the transfer roller (a).
10. Check or replace the transfer roller (a), and then reattach the parts which are detached in the original position.

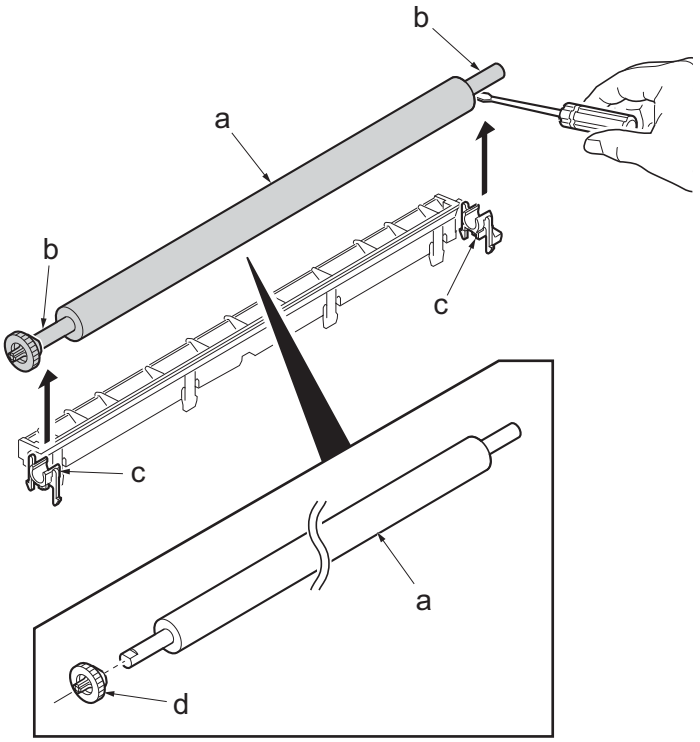

(5) Fuser section

(5-1)Detaching and reattaching the fuser unit

Procedures

1. Slightly pull out the cassette
2. Open the rear cover (a).
3. Open the cassette cover (c) and release the hook (d) of the left rear cover (b) in the direction of the arrow.
4. Twist the rear left cover (b) to release the hook (e) and detach it.

Attention:
The direction of hook (d) or (e) is reverse. Pay attention to the damage when detaching.

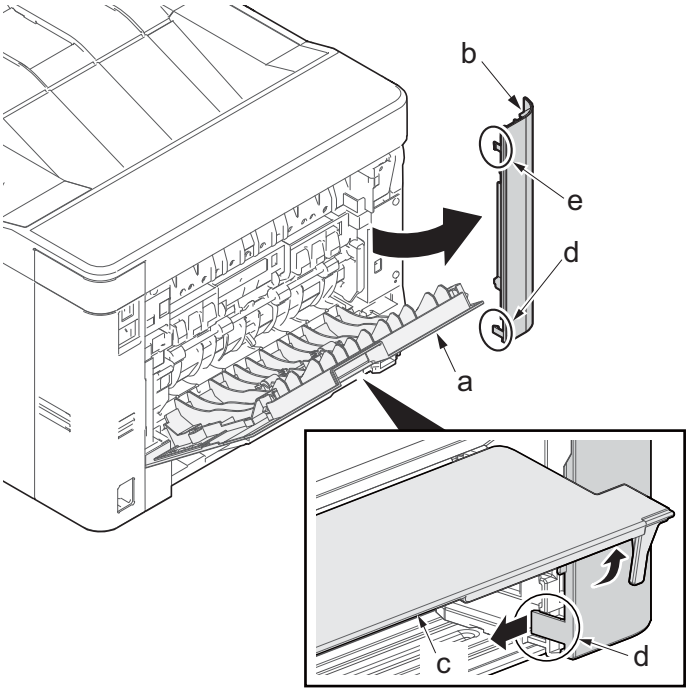

5. Open the rear cover (a) to align it to the position of the shaft (b) and detach it from the fulcrum (c) in the direction of the arrow.

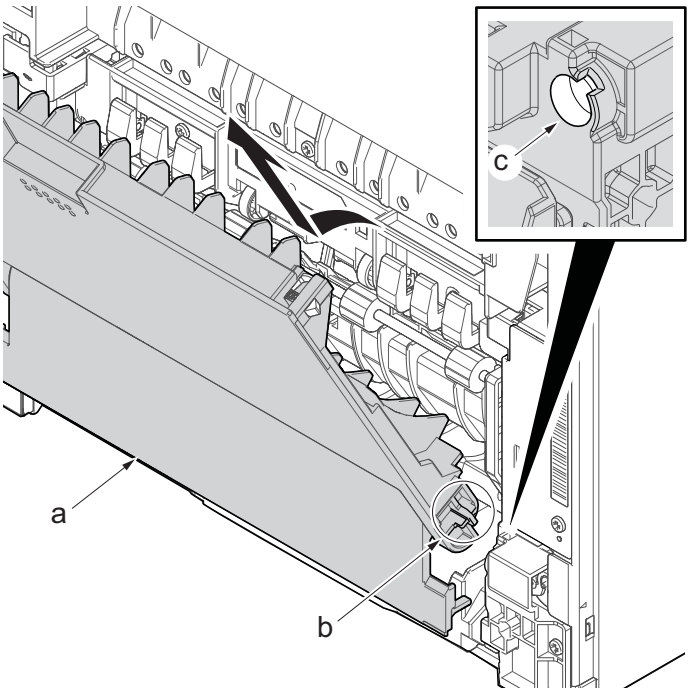

6. Detach the right rear cover (a) while twisting it.

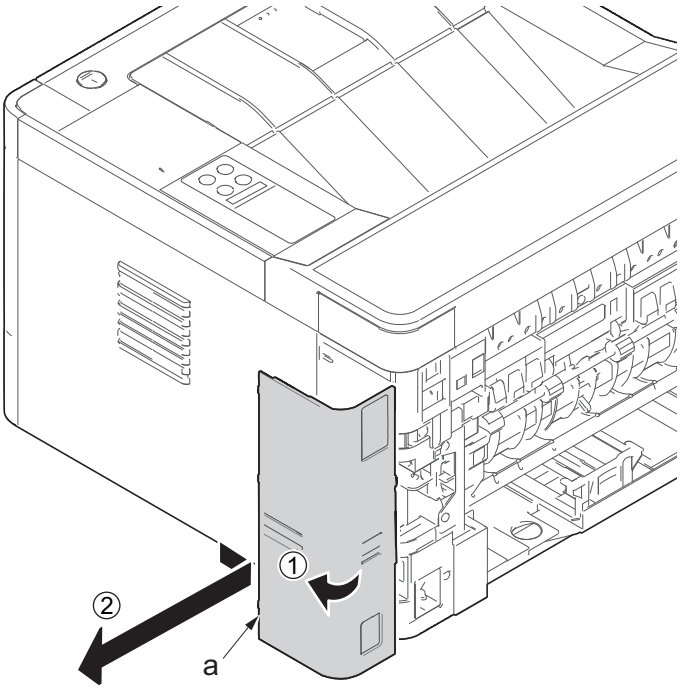

7. Remove two screws (M3x8P tight)(a) and detach the fuser wire cover (b).

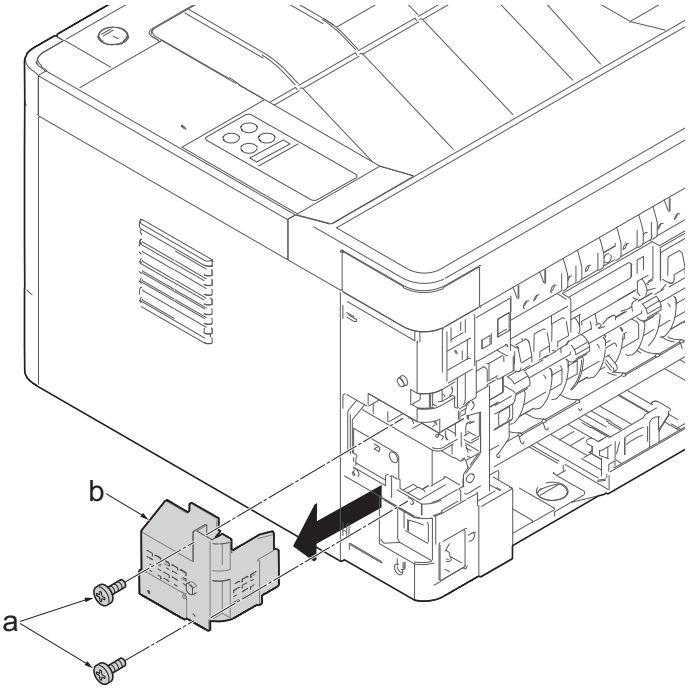

8. Disconnect the connector (a) from the low voltage power source PWB.
9. Disconnect the connector (b) from the main/ engine PWB.

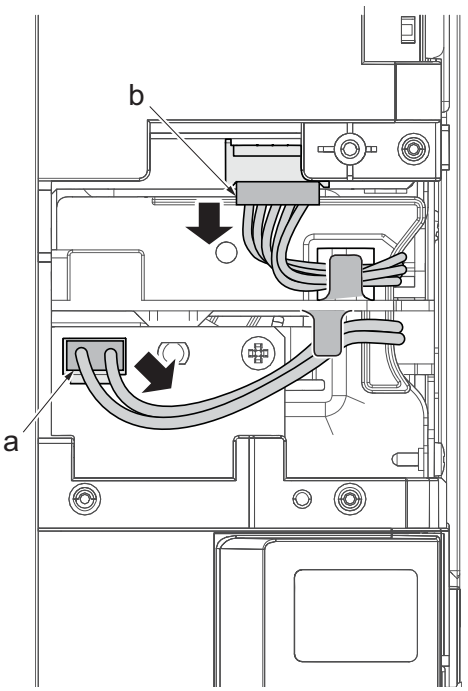

10. Remove four screws (M3×8S tight)(a).

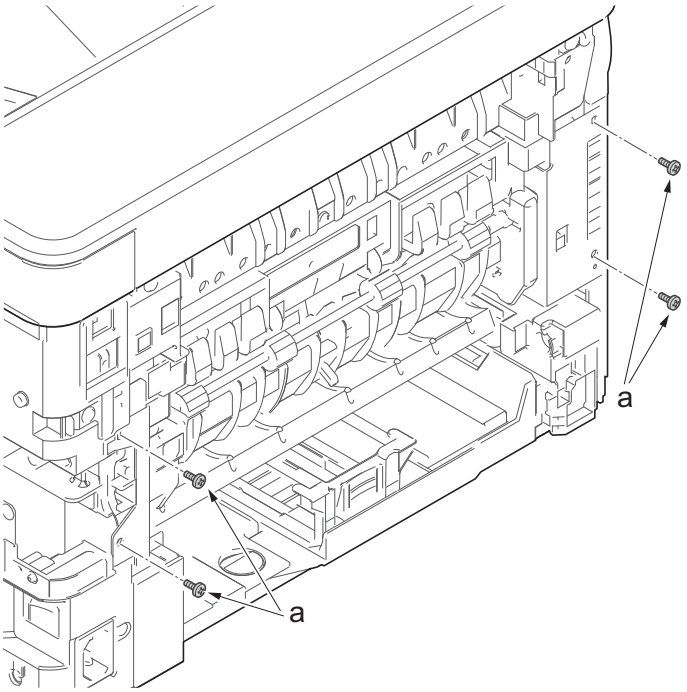

11. Pull out the fuser unit (a) while holding the both ends of it.
12. Check or replace the fuser unit (a), and then reattach the parts which are detached in the original position.

Attention:
When detaching and reattaching, pay attention not to burn by touching the hot section.

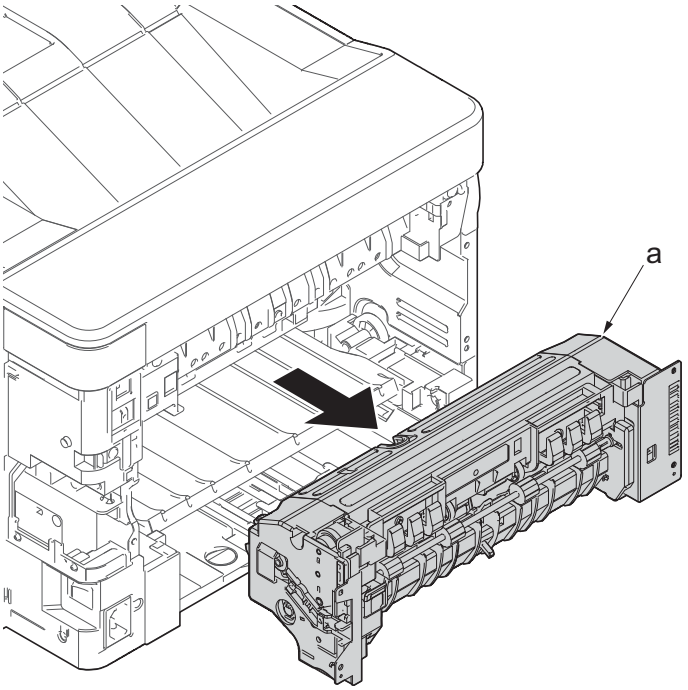

4-4Disassembly and Reassembly

(1) Outer covers

(1-1)Detaching and reattaching the left rear cover

Procedures

1. Slightly pull out the cassette
2. Open the rear cover (a).
3. Open the cassette cover (c) and release the hook (d) of the left rear cover (b) in the direction of the arrow.
4. Twist the rear left cover (b) to release the hook (e) and detach it.

Attention:

The direction of hook (d) or (e) is reverse. Pay attention to the damage when detaching.

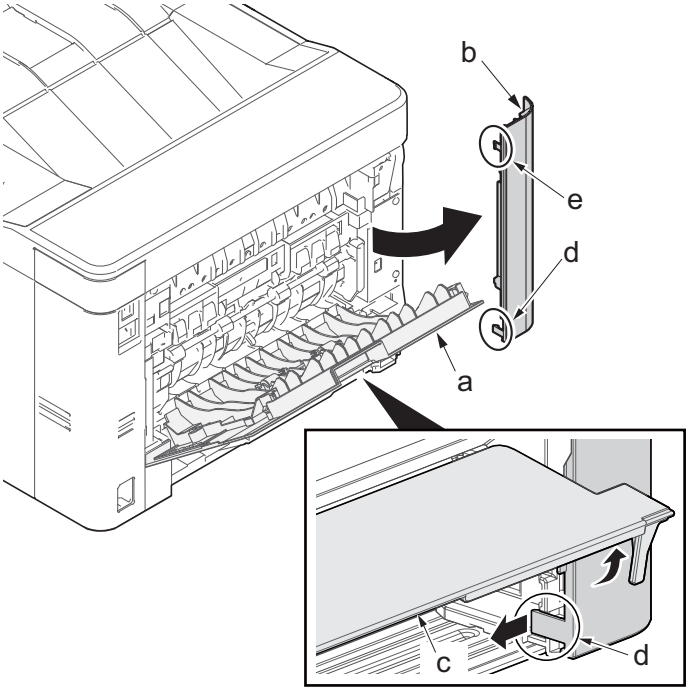

(1-2)Detaching and reattaching the upper rear cover

Procedures

1. Detach the right rear cover (a) while twisting it.
2. Remove the screw(M3×10TP)(b).
3. Release the protrusion (e) by using a flat-blade screwdriver (d).
4. Detach the Wi-Fi cover(c).

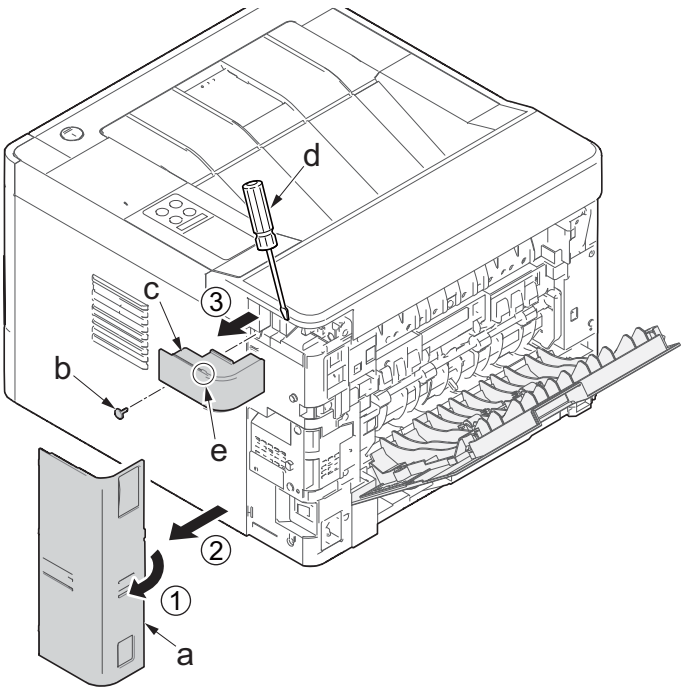

5. Remove two screws(M3×10TP)(a).
6. Release two hooks (b) of the upper rear cover(c) and detach it.

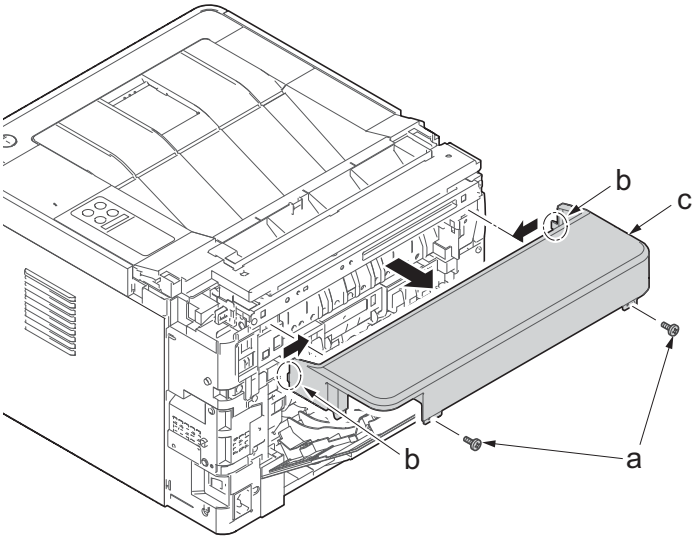

(1-3)Detaching and reattaching the left cover

Procedures

1. Pull out the cassette
2. Open the front cover (a).
3. Release four hooks (b) at the front side of the left cover(a).

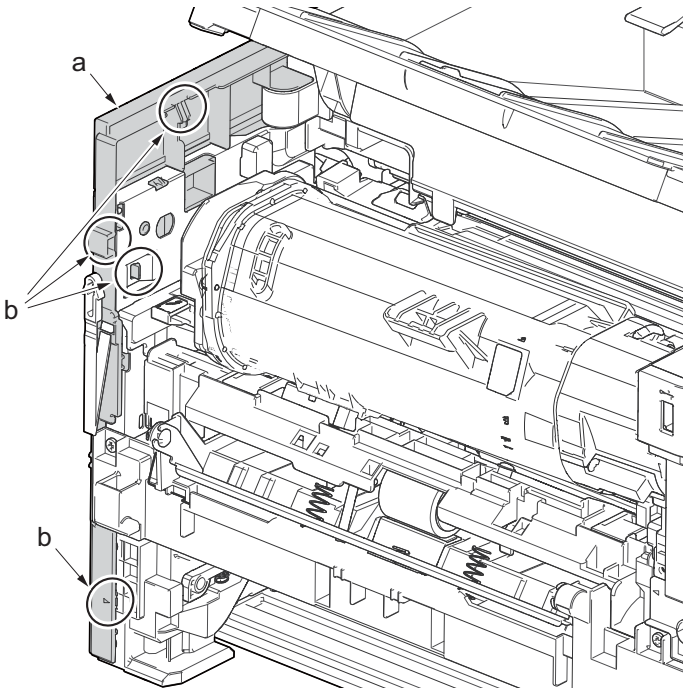

4. Release two hooks (b) at the rear side of the left cover (a).
5. While tilting the left cover (a), detach it in the direction of the arrow.

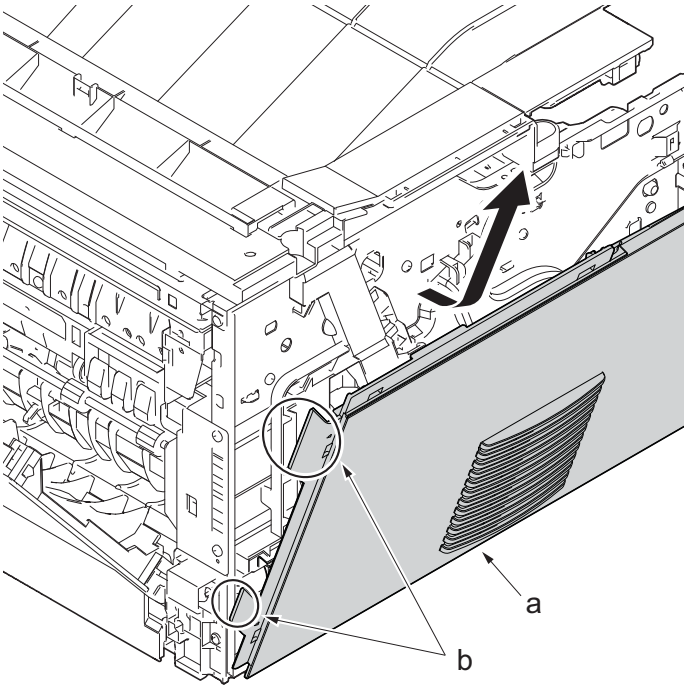

(1-4)Detaching and reattaching the right cover

Procedures

1. Twist three hooks (b) at the rear side of the right cover (a) to detach it.
2. Release two hooks by using a flat-head screwdriver (c).

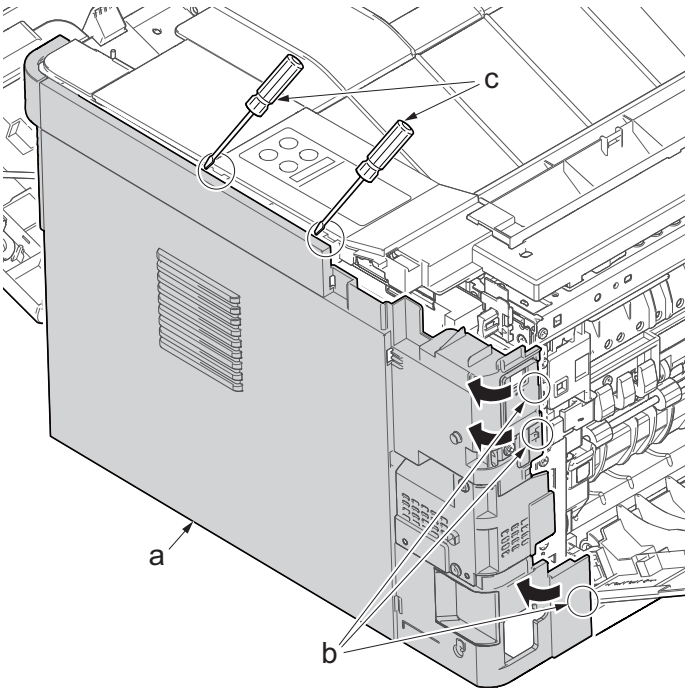

3. Release three hooks by using a flat-head screwdriver (d).
4. Twist two hooks (c) at the front side of the right cover (b) to release them and detach the right cover (b).

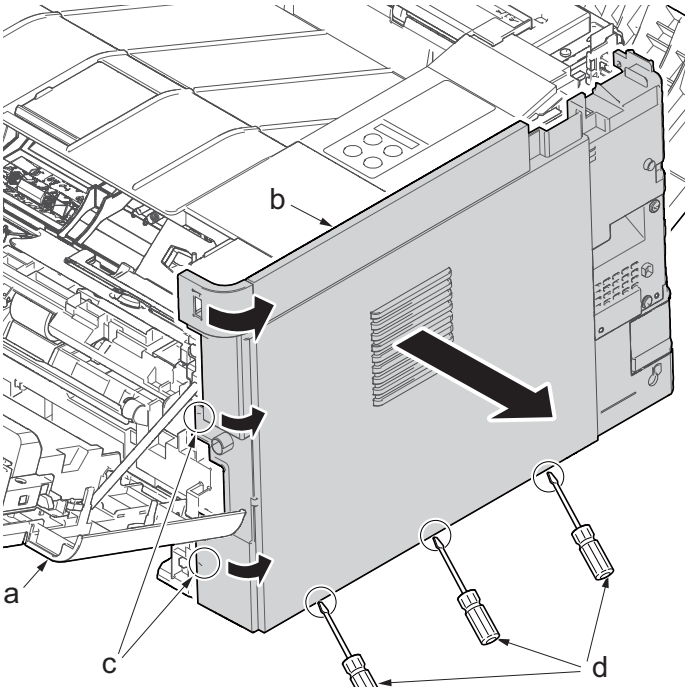

(1-5)Detaching and reattaching the front cover

Procedures

1. Slightly pull out the cassette
2. Open the rear cover (a).
3. Open the cassette cover (c) and release the hook (d) of the left rear cover (b) in the direction of the arrow.
4. Twist the rear left cover (b) to release the hook (e) and detach it.

Attention:

The direction of hook (d) or (e) is reverse. Pay attention to the damage when detaching.

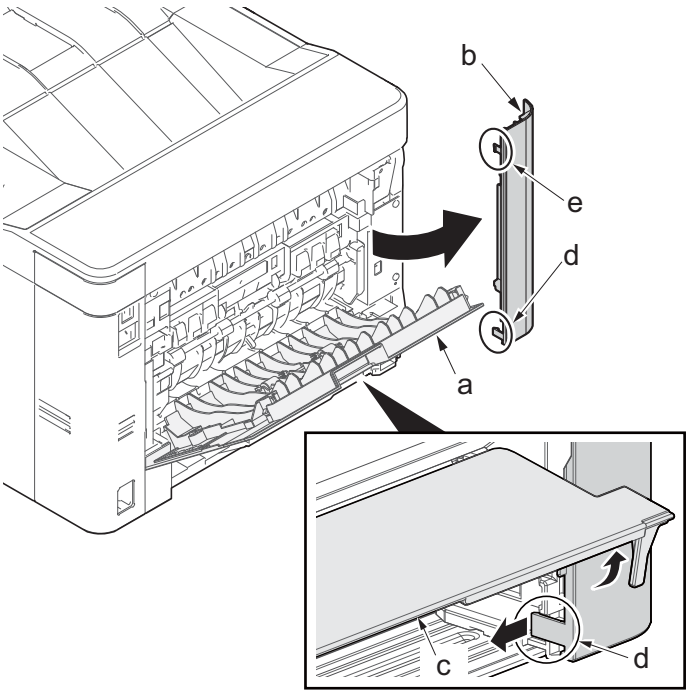

5. Detach the right rear cover (a) while twisting it.
6. Remove the screw(M3×10TP)(b).
7. Release the protrusion (e) by using a flat-blade screwdriver (d).
8. Detach the Wi-Fi cover(c).

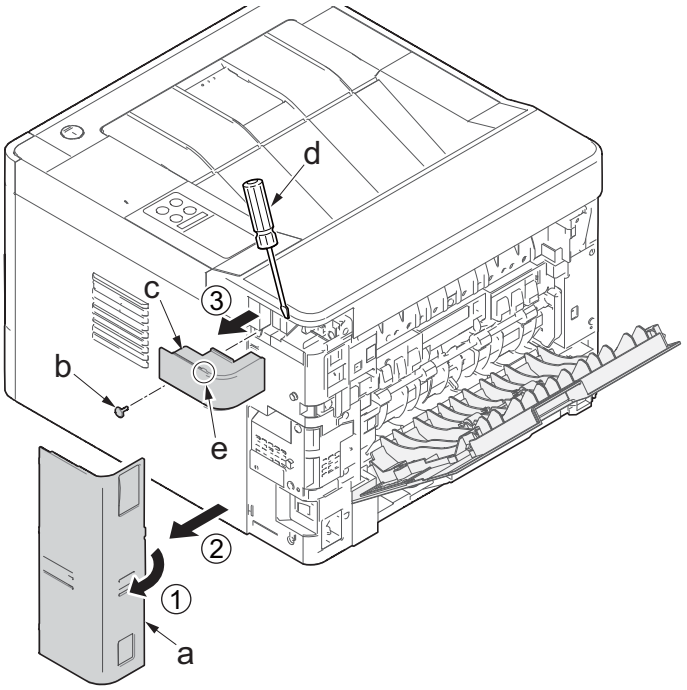

9. Remove two screws(M3×10TP)(a).
10. Release two hooks (b) of the upper rear cover(c) and detach it.

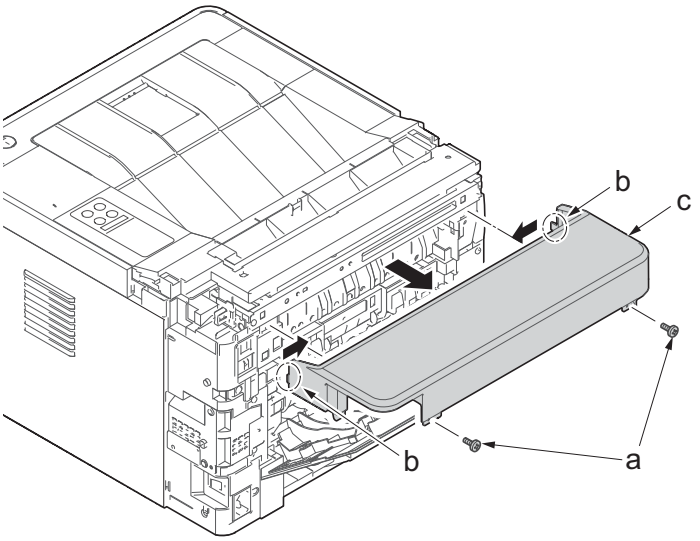

11. Pull out the cassette
12. Open the front cover (a).
13. Twist three hooks (b) at the rear side of the right cover (a) to detach it.
14. Release two hooks by using a flat-head screwdriver (c).

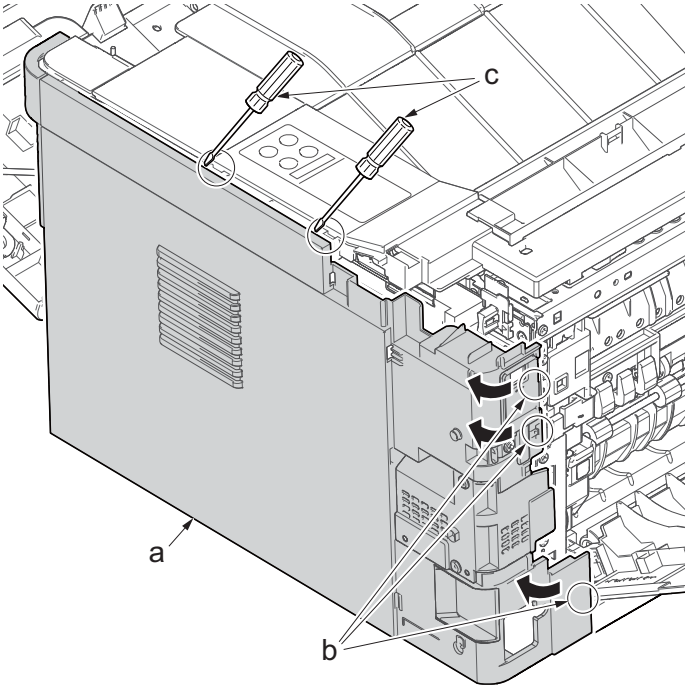

15. Release three hooks by using a flat-head screwdriver (d).
16. Twist two hooks (c) at the front side of the right cover (b) to release them and detach the right cover (b).

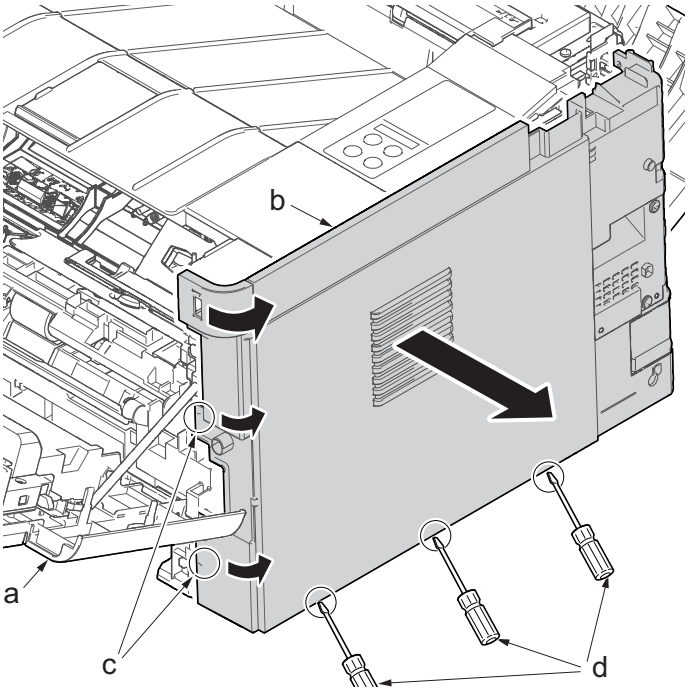

17. Disconnect the connector (b) from the main PWB (a).
18. Detach the wires (d) from the hooks of the wire guides (c).

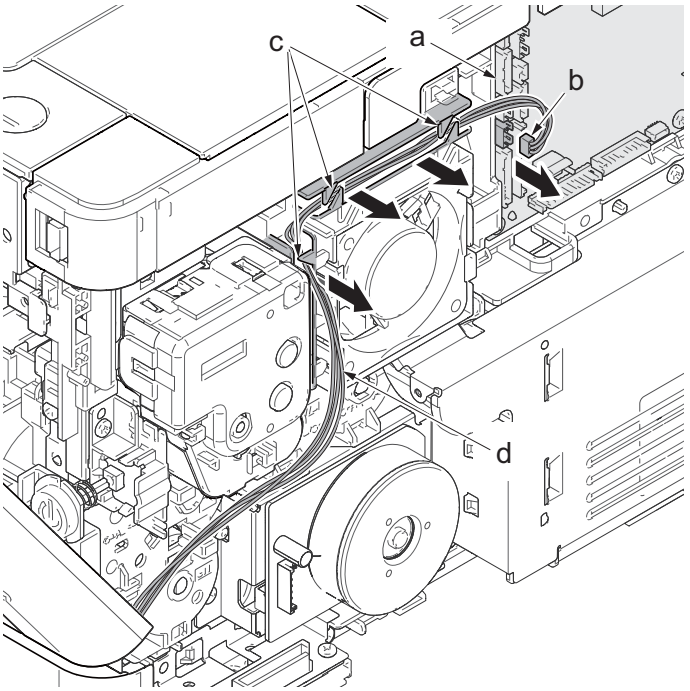

19. Open the front cover (a) and detach two straps (b) by using pliers (c).

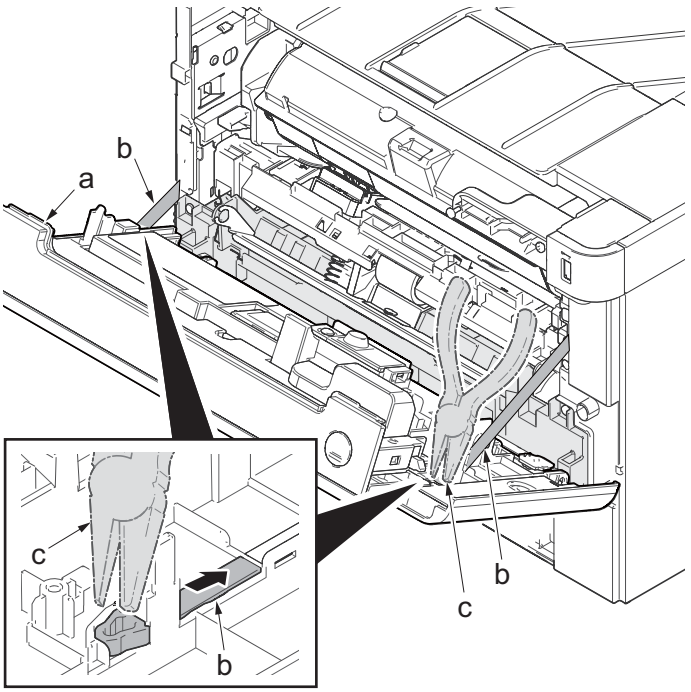

20. Open the front cover (a) to the bottom and detach the left side of cover fulcrum from the fulcrum shaft (b).
21. Release the right side of fulcrum portion and detach the front cover (a).

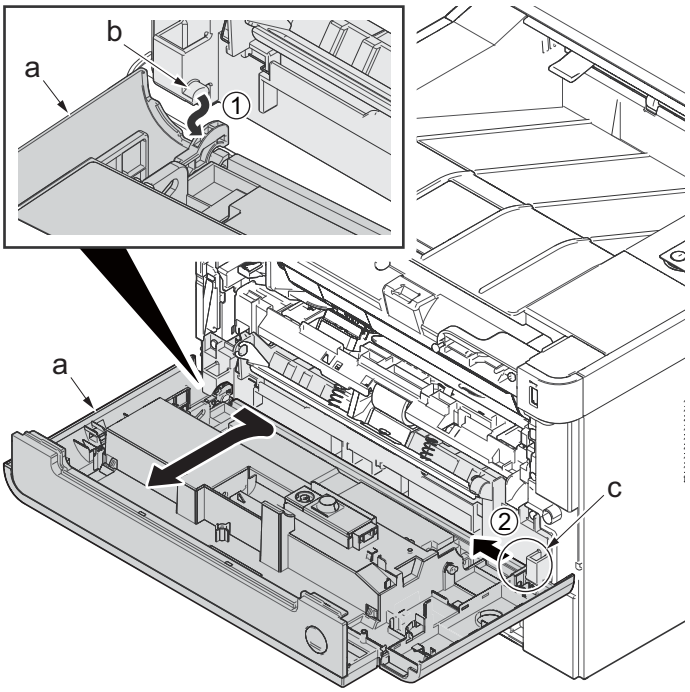

(1-6)Detaching and reattaching the rear cover

Procedures

1. Open the rear cover (a) to align it to the position of the shaft (b) and detach it from the fulcrum (c) in the direction of the arrow.

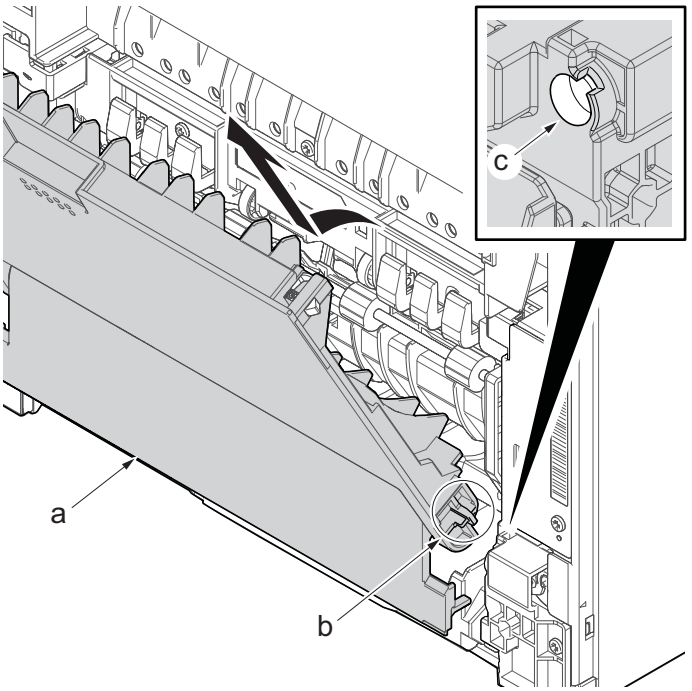

(2) Optical section

(2-1)Detaching and reattaching the laser scanner unit (LSU).

Procedures

1. Slightly pull out the cassette
2. Open the rear cover (a).
3. Open the cassette cover (c) and release the hook (d) of the left rear cover (b) in the direction of the arrow.
4. Twist the rear left cover (b) to release the hook (e) and detach it.

Attention:
The direction of hook (d) or (e) is reverse. Pay attention to the damage when detaching.

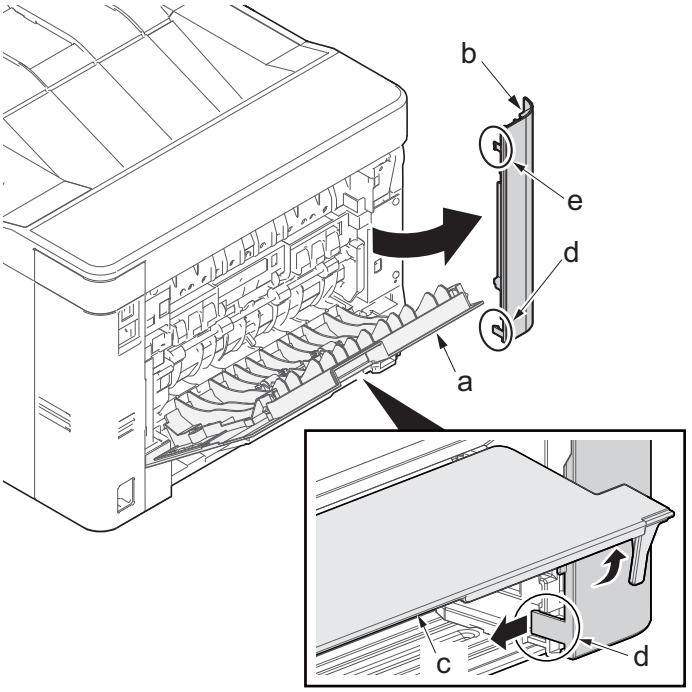

5. Detach the right rear cover (a) while twisting it.
6. Remove the screw(M3×10TP)(b).
7. Release the protrusion (e) by using a flat-blade screwdriver (d).
8. Detach the Wi-Fi cover(c).

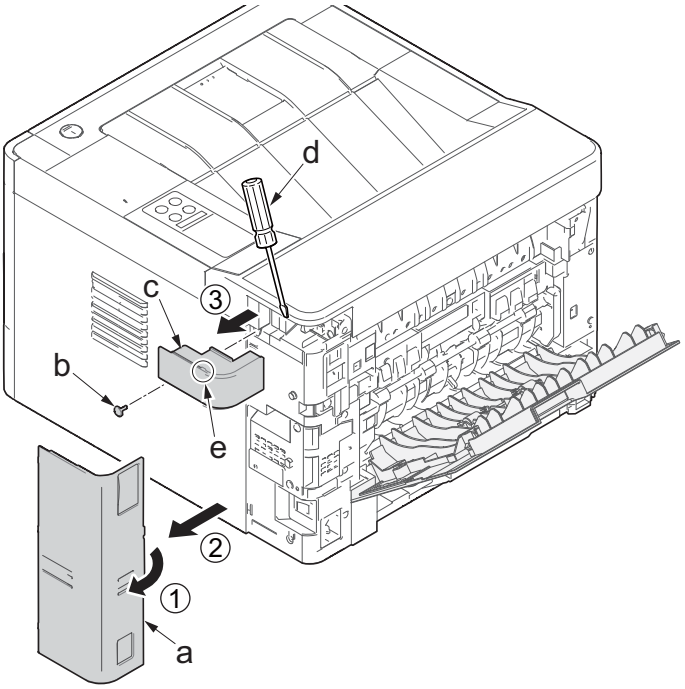

9. Remove two screws(M3×10TP)(a).
10. Release two hooks (b) of the upper rear cover(c) and detach it.

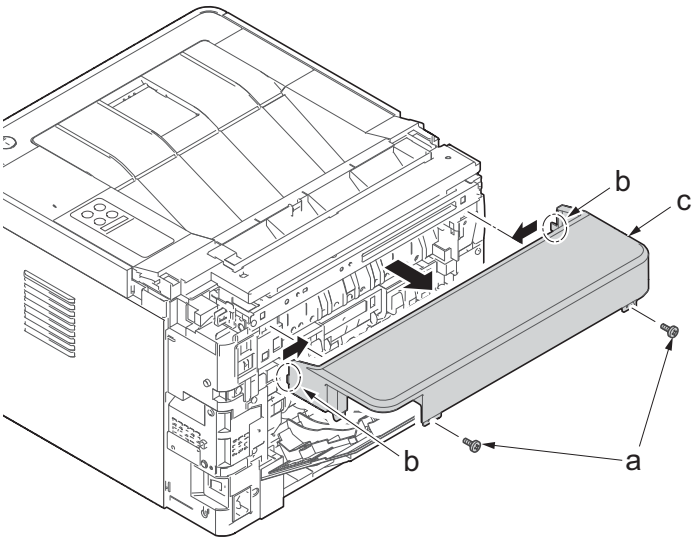

11. Pull out the cassette
12. Open the front cover (a).
13. Release four hooks (b) at the front side of the left cover(a).

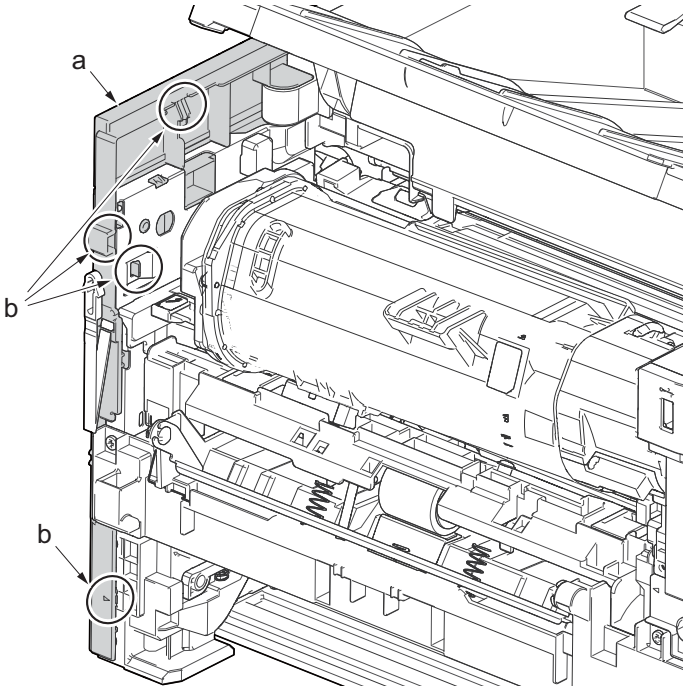

14. Release two hooks (b) at the rear side of the left cover (a).
15. While tilting the left cover (a), detach it in the direction of the arrow.

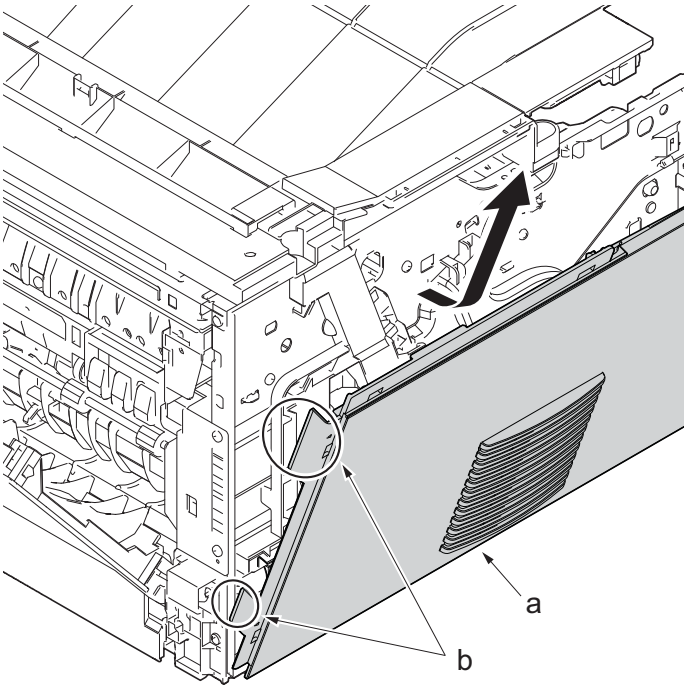

16. Twist three hooks (b) at the rear side of the right cover (a) to detach it.
17. Release two hooks by using a flat-head screwdriver (c).

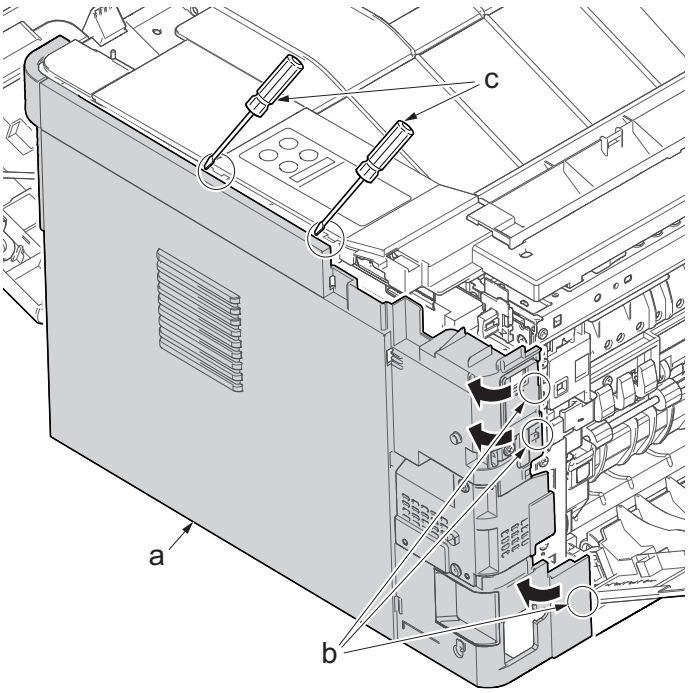

18. Release three hooks by using a flat-head screwdriver (d).
19. Twist two hooks (c) at the front side of the right cover (b) to release them and detach the right cover (b).

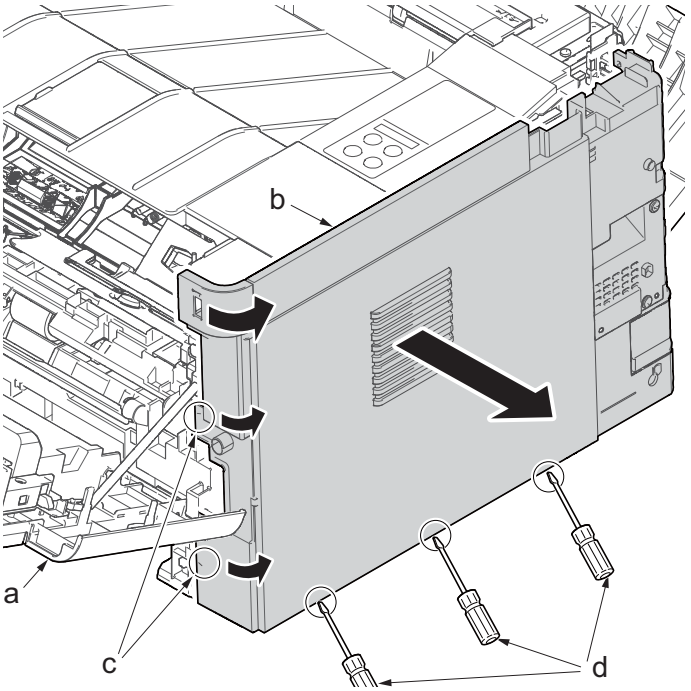

20. Push down the developer release lever (b).
21. Detach the developer unit (a).

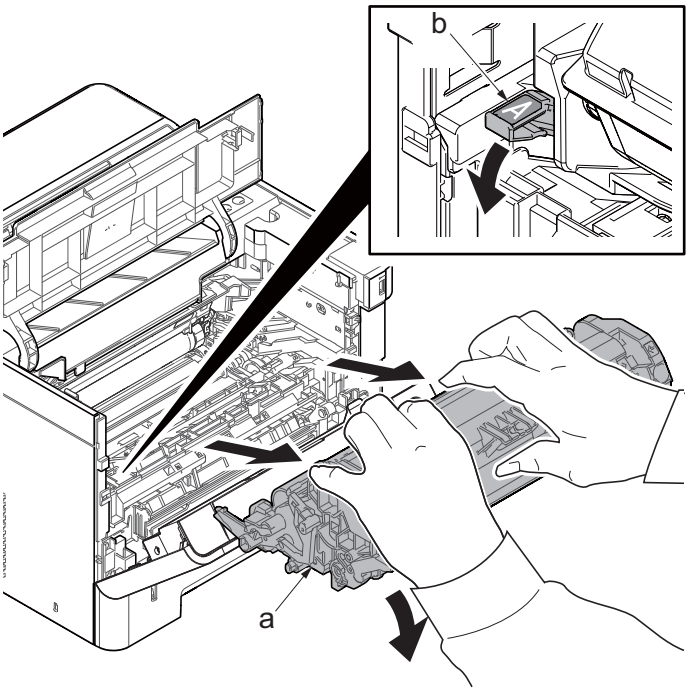

22. Open the top cover (a).
23. Remove the screws(M3x8S tight)(b), detach the right middle cover(c).

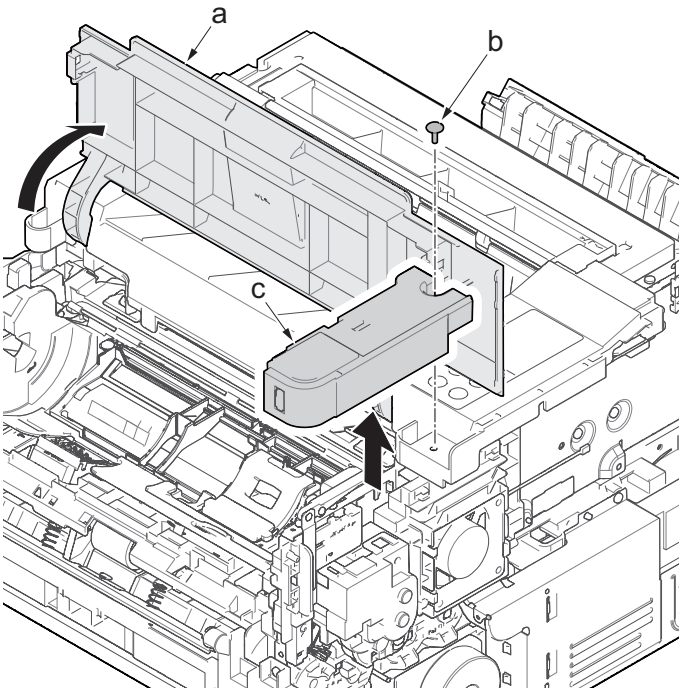

24. Remove two screws(M3×8TP)(a) and remove the eject tray(b).

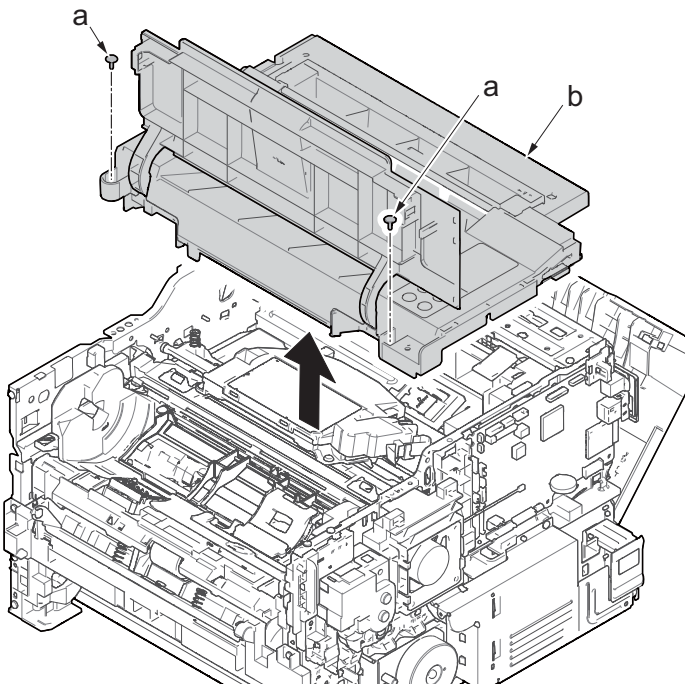

25. Disconnect the connector (b) and the FFC (c) from the main/engine PWB (a).
26. Detach the wire from the clamp (d).

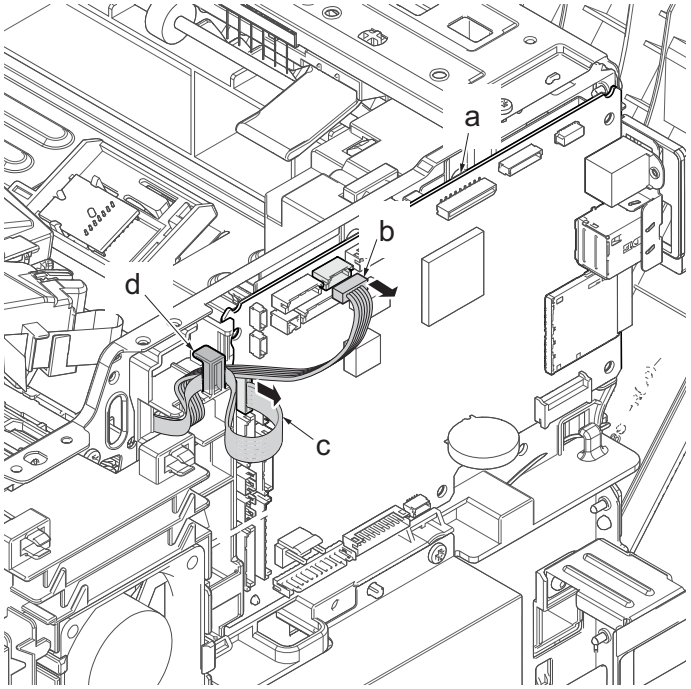

27. Remove four screws (M3×6TP)(b) from the laser scanner unit (a).
28. Check or replace the laser scanner unit (a), and then reattach the parts which are detached in the original position.

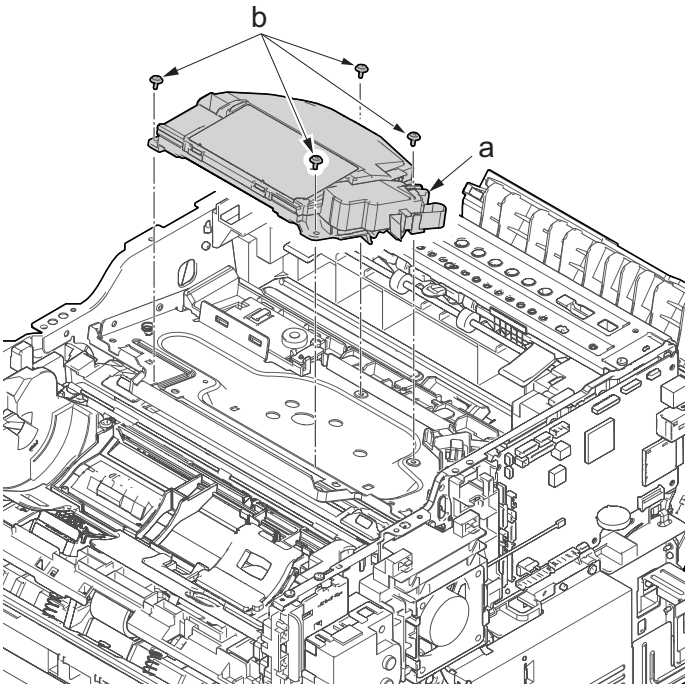

*: When securing the laser scanner unit with screws, execute it in the order of the figure to the right.

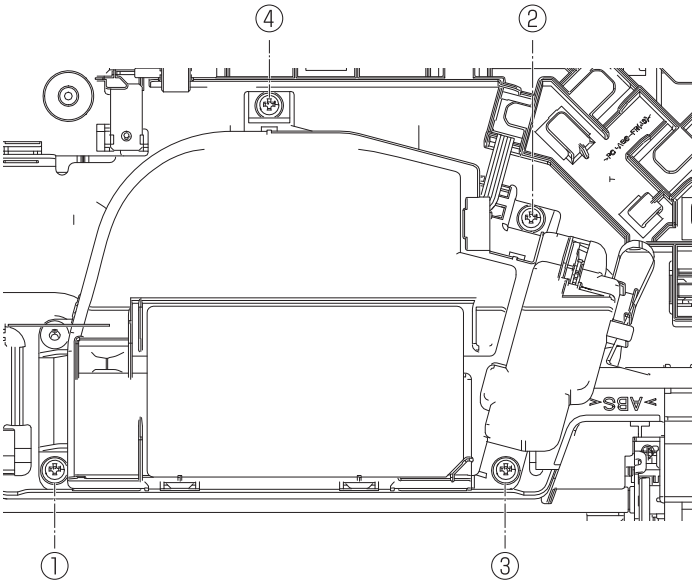

(3) Drive section

(3-1)Detaching and reattaching the main motor

Procedures

1. Slightly pull out the cassette
2. Open the rear cover (a).
3. Open the cassette cover (c) and release the hook (d) of the left rear cover (b) in the direction of the arrow.
4. Twist the rear left cover (b) to release the hook (e) and detach it.

Attention:
The direction of hook (d) or (e) is reverse. Pay attention to the damage when detaching.

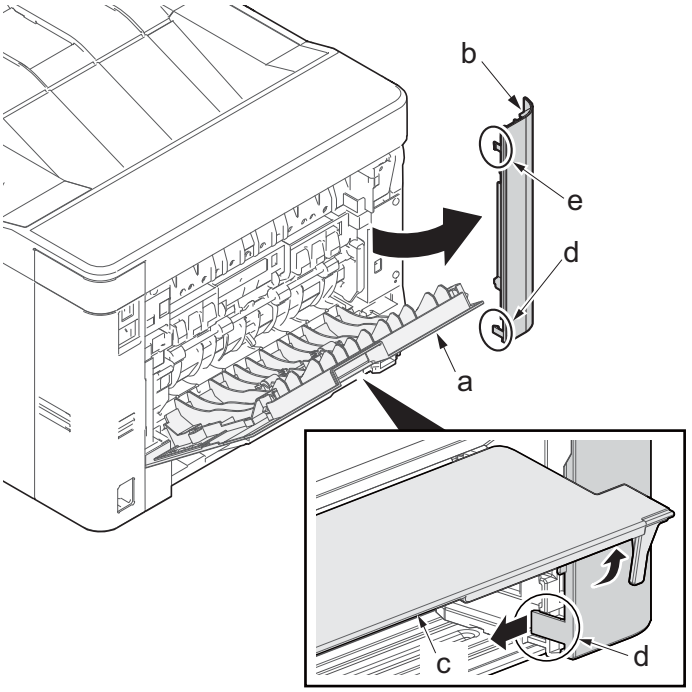

5. Detach the right rear cover (a) while twisting it.
6. Remove the screw(M3×10TP)(b).
7. Release the protrusion (e) by using a flat-blade screwdriver (d).
8. Detach the Wi-Fi cover(c).

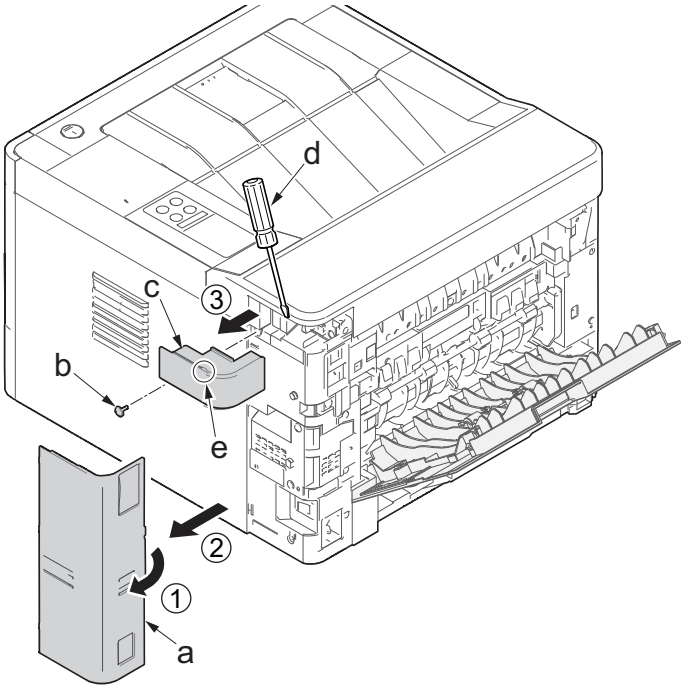

9. Remove two screws(M3×10TP)(a).
10. Release two hooks (b) of the upper rear cover(c) and detach it.

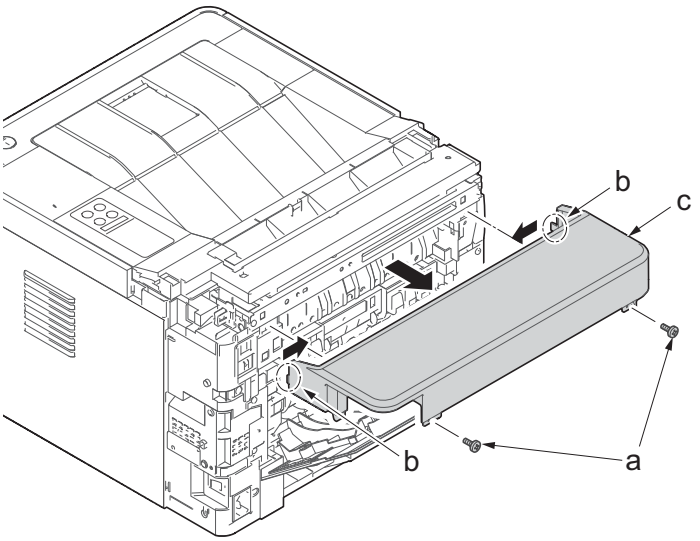

11. Pull out the cassette
12. Open the front cover (a).
13. Twist three hooks (b) at the rear side of the right cover (a) to detach it.
14. Release two hooks by using a flat-head screwdriver (c).

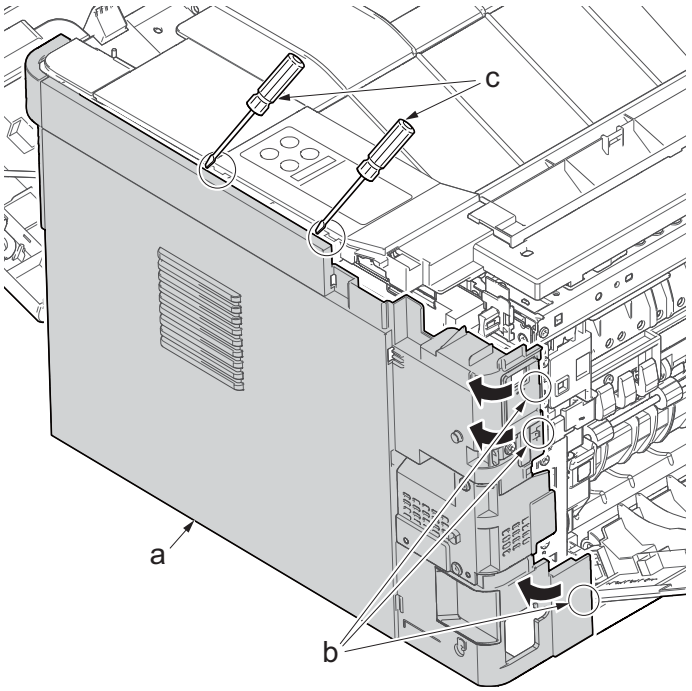

15. Release three hooks by using a flat-head screwdriver (d).
16. Twist two hooks (c) at the front side of the right cover (b) to release them and detach the right cover (b).

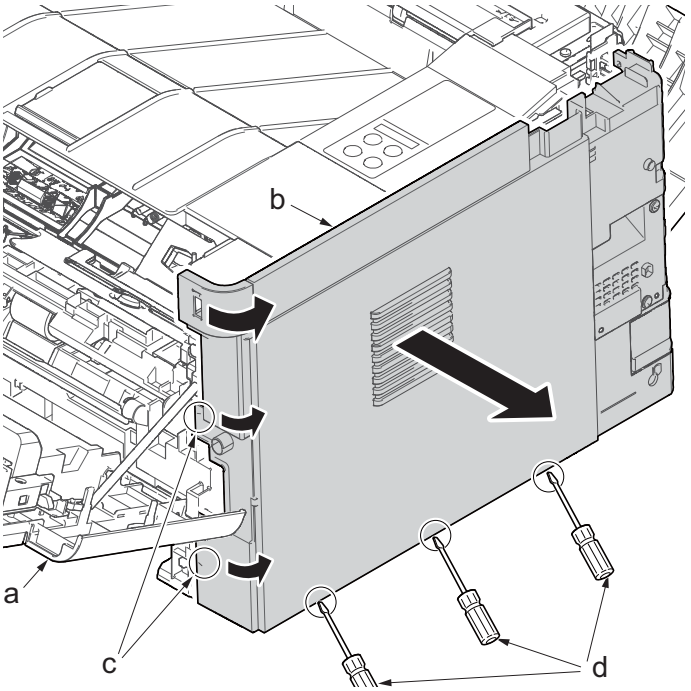

17. Remove three screws (M3×8Stight)(a) and the screw (M3×8Ptight)(b) securing the low voltage power source PWB cover (c).
18. Remove the low voltage power source PWB cover (c).

Attention: When detaching the low voltage power source PWB (c), the lower voltage power source PWB protection plate may fall.

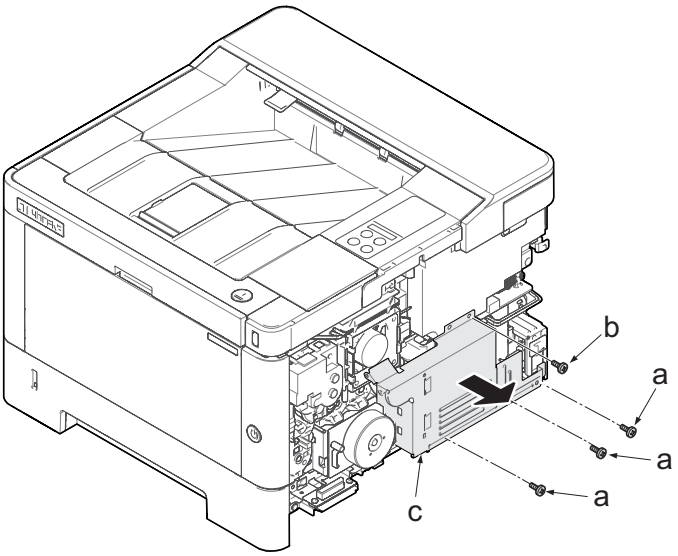

19. Disconnect the connector (a).
20. Remove three screws(M3×8S tight)(b), detach the main motor(c).
21. Check or replace the main motor(c), and then reattach the parts which are detached in the original position.

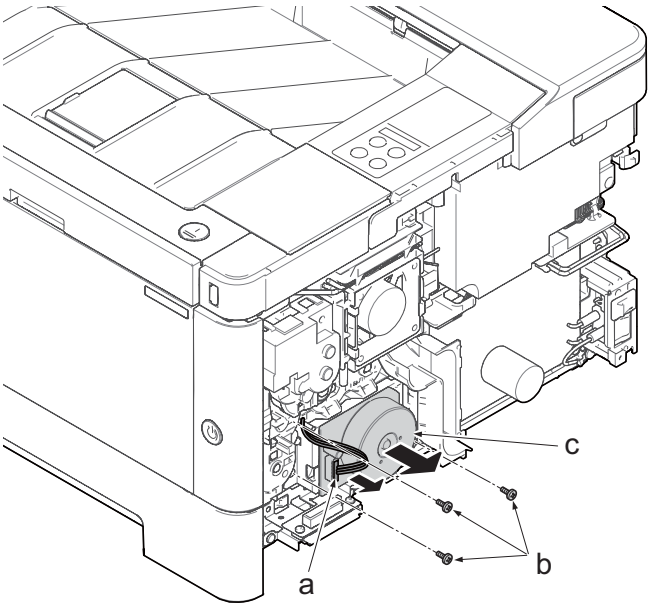

(3-2)Detaching and reattaching the fuser pressure release drive unit

Procedures

1. Slightly pull out the cassette
2. Open the rear cover (a).
3. Open the cassette cover (c) and release the hook (d) of the left rear cover (b) in the direction of the arrow.
4. Twist the rear left cover (b) to release the hook (e) and detach it.

Attention:
The direction of hook (d) or (e) is reverse. Pay attention to the damage when detaching.

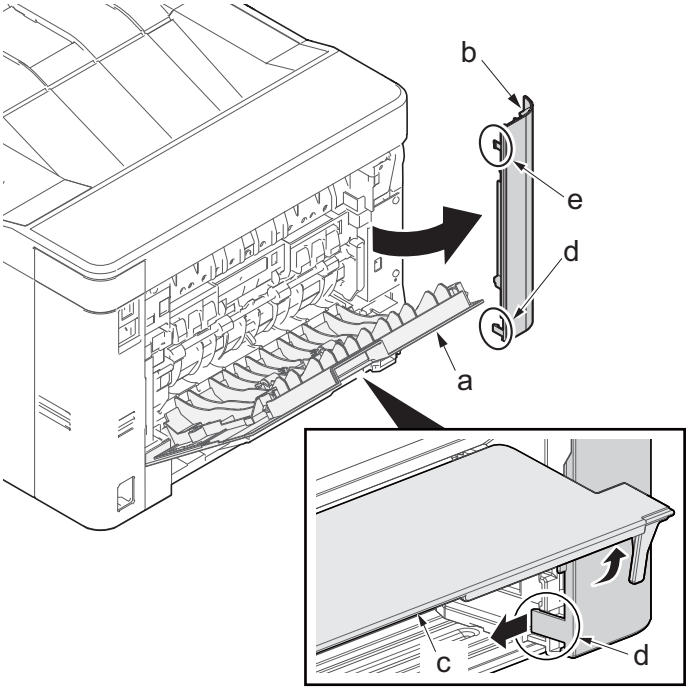

5. Detach the right rear cover (a) while twisting it.
6. Remove the screw(M3×10TP)(b).
7. Release the protrusion (e) by using a flat-blade screwdriver (d).
8. Detach the Wi-Fi cover(c).

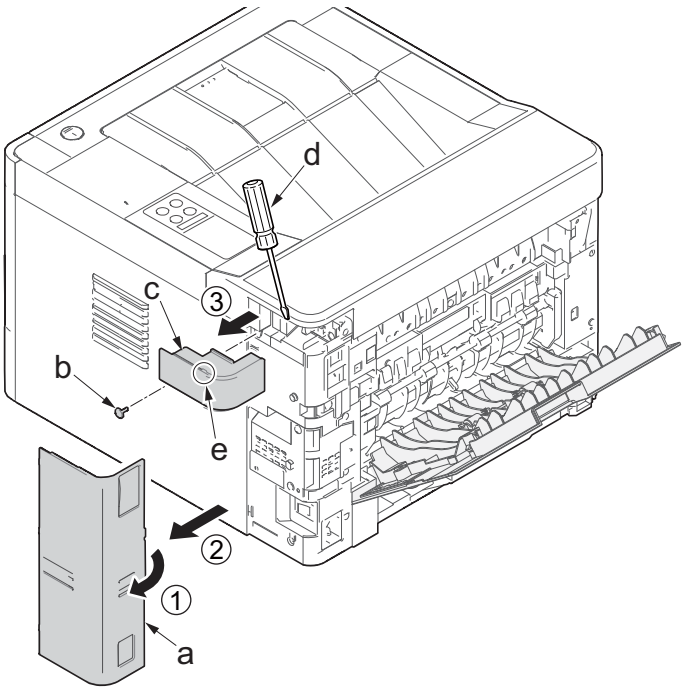

9. Remove two screws(M3×10TP)(a).
10. Release two hooks (b) of the upper rear cover(c) and detach it.

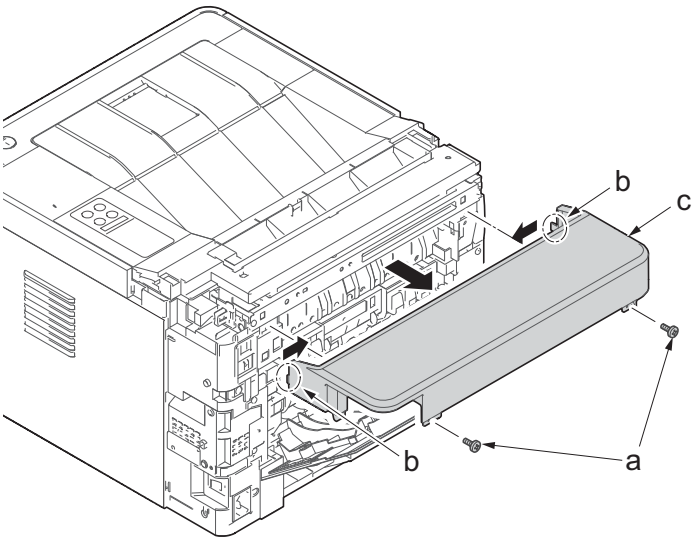

1. Pull out the cassette
2. Open the front cover (a).
3. Release four hooks (b) at the front side of the left cover(a).

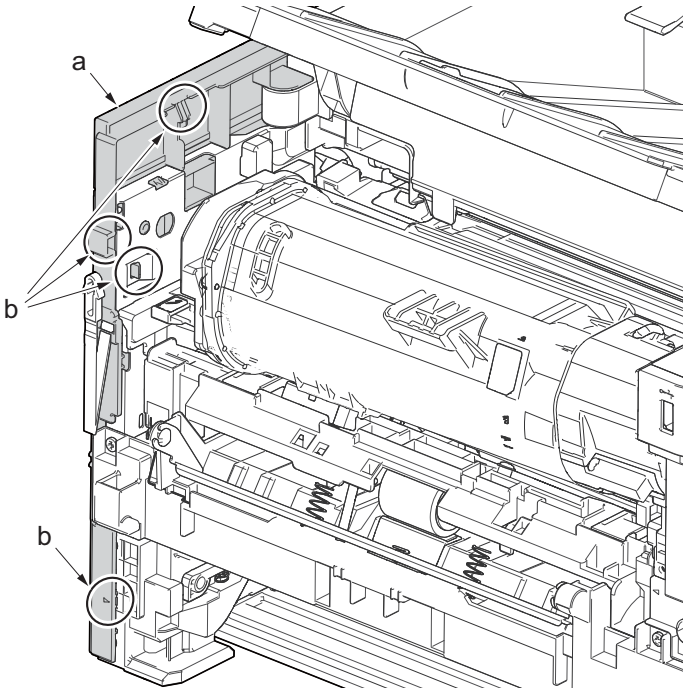

4. Release two hooks (b) at the rear side of the left cover (a).
5. While tilting the left cover (a), detach it in the direction of the arrow.

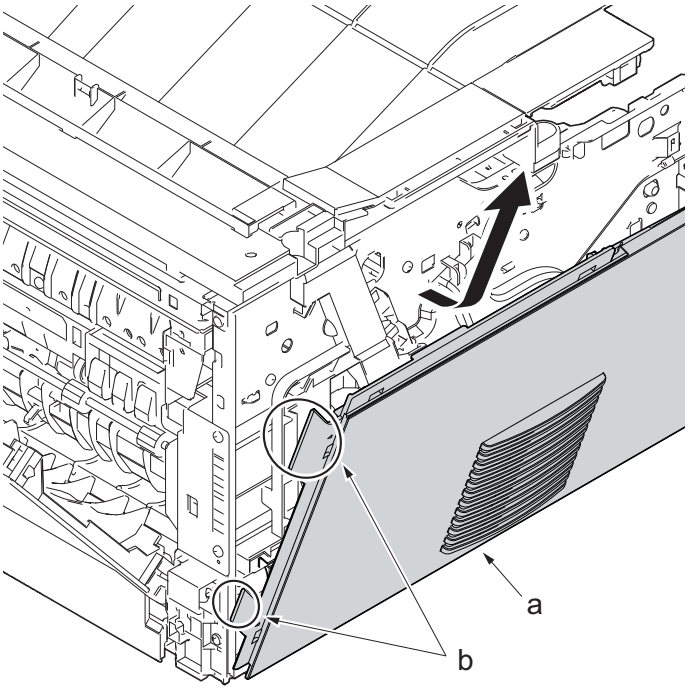

6. Disconnect the connector (a).

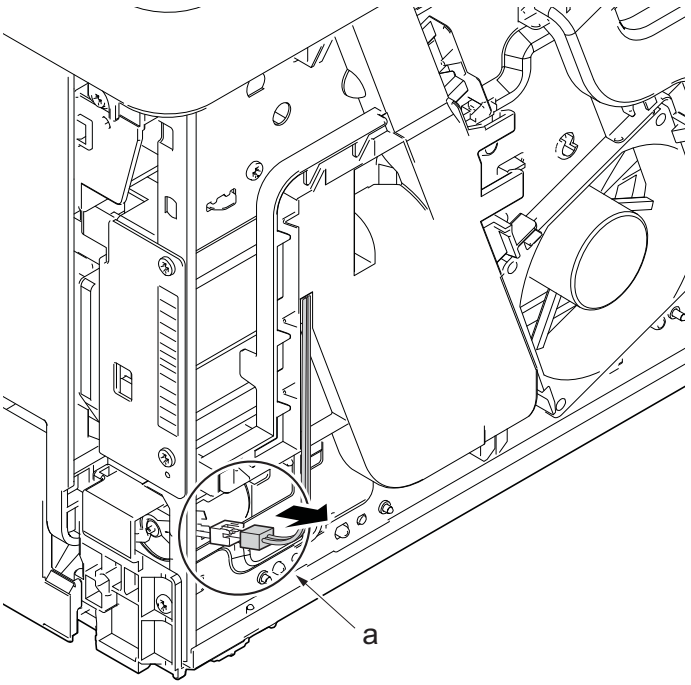

7. Open the front cover (a).
8. Open the top cover (b).

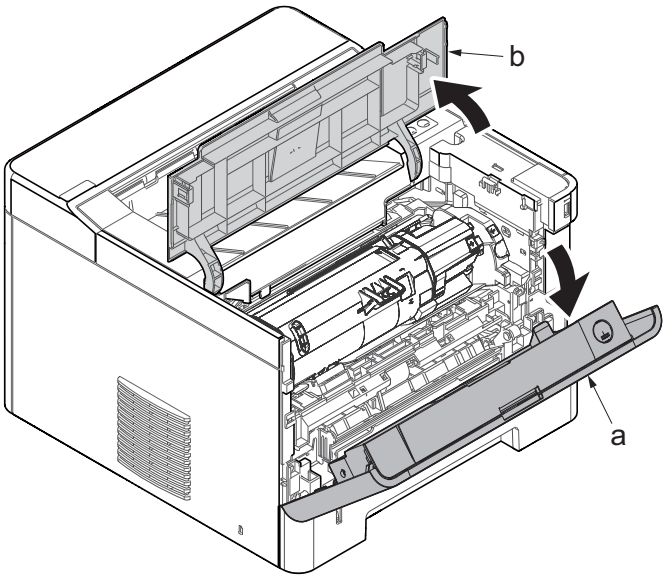

9. Push down the developer release lever (b).
10. Detach the developer unit (a).

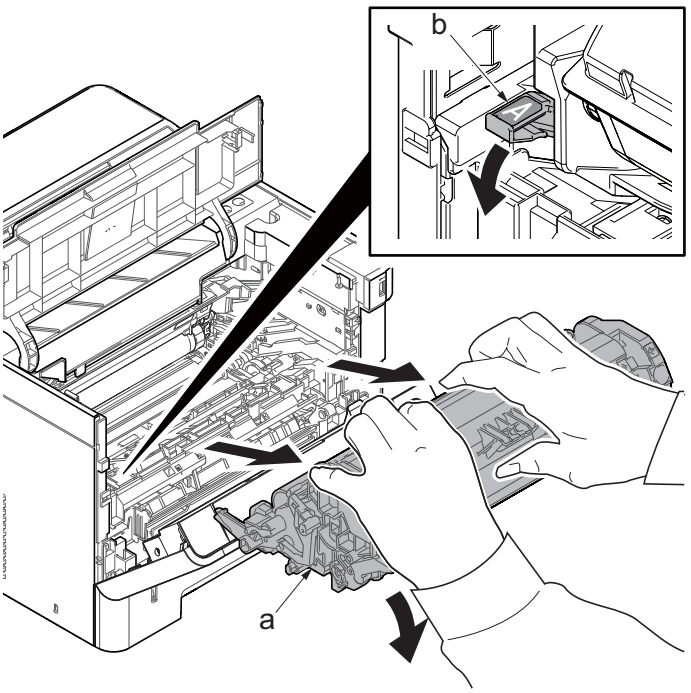

11. Detach the drum unit (a).

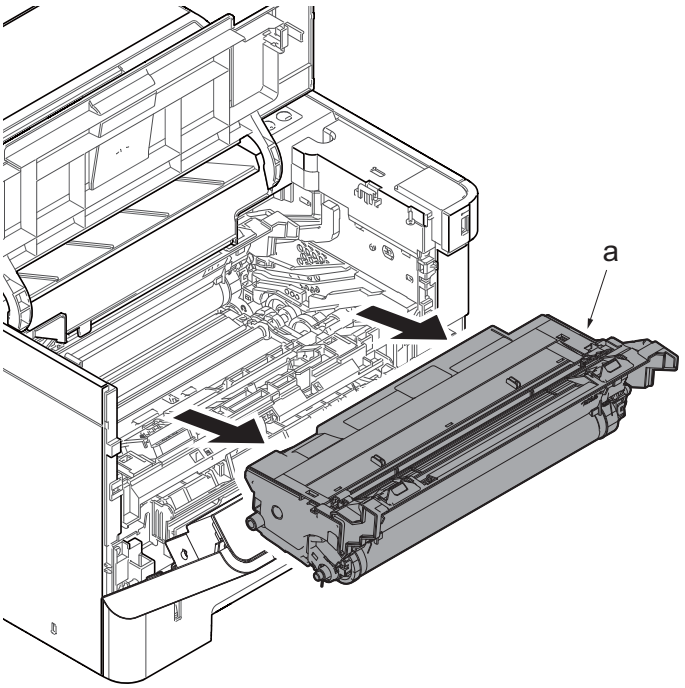

12. Stand the main unit so that you can see the bottom side.
13. Remove four screws(M3x8P tight)(a) and remove the front stay(b).

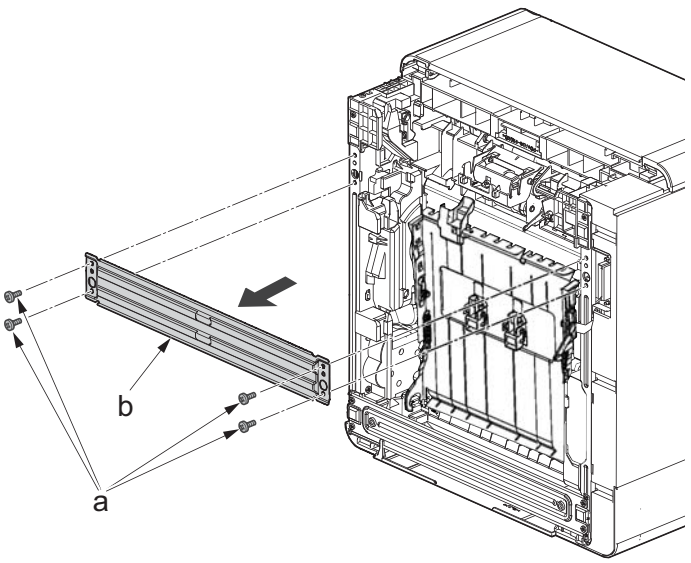

14. Tilt the DU assembly (a) and detach two stoppers(b) while pushing them inside.
15. Lift down the DU assembly(a) to the bottom and pull it toward you to detach it.

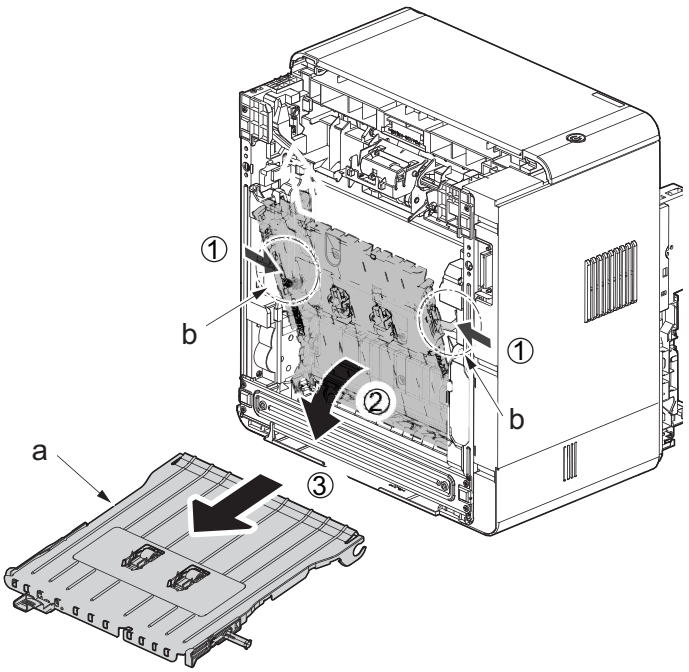

16. Remove two screws (a)(M3x8S tight).
17. Release the hook(b) and detach the fuser pressure release drive unit(c).
18. Check the fuser pressure release drive unit(c) and clean, or change it.
19. Reattach the parts in the original position.

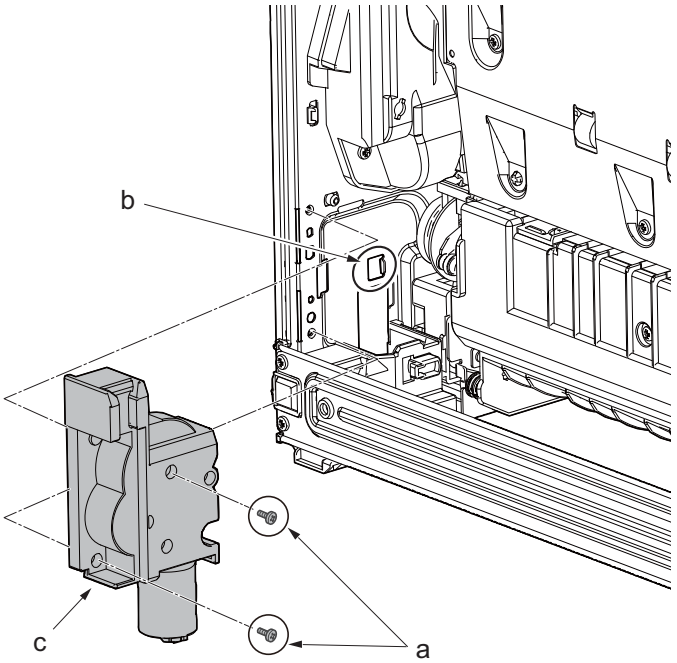

(3-3)Detaching and reattaching the wall drive assy

Procedures

1. Slightly pull out the cassette
2. Open the rear cover (a).
3. Open the cassette cover (c) and release the hook (d) of the left rear cover (b) in the direction of the arrow.
4. Twist the rear left cover (b) to release the hook (e) and detach it.

Attention:
The direction of hook (d) or (e) is reverse. Pay attention to the damage when detaching.

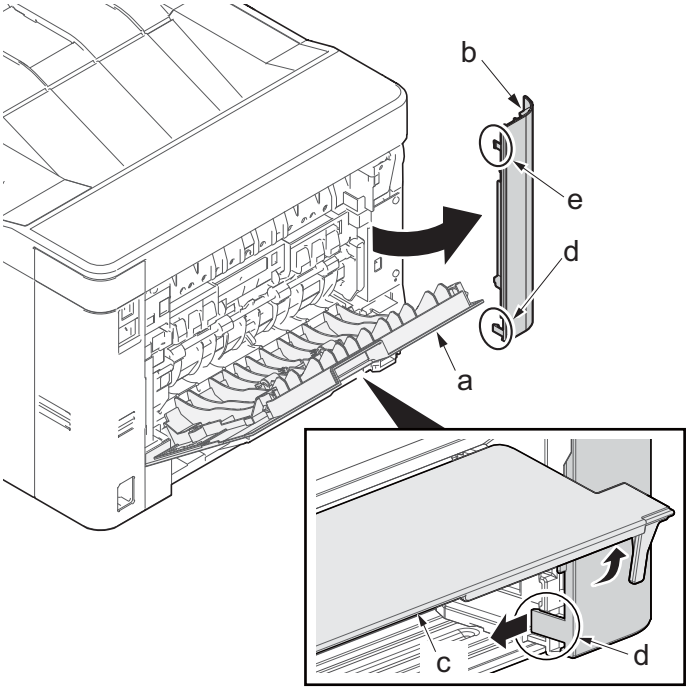

5. Detach the right rear cover (a) while twisting it.
6. Remove the screw(M3×10TP)(b).
7. Release the protrusion (e) by using a flat-blade screwdriver (d).
8. Detach the Wi-Fi cover(c).

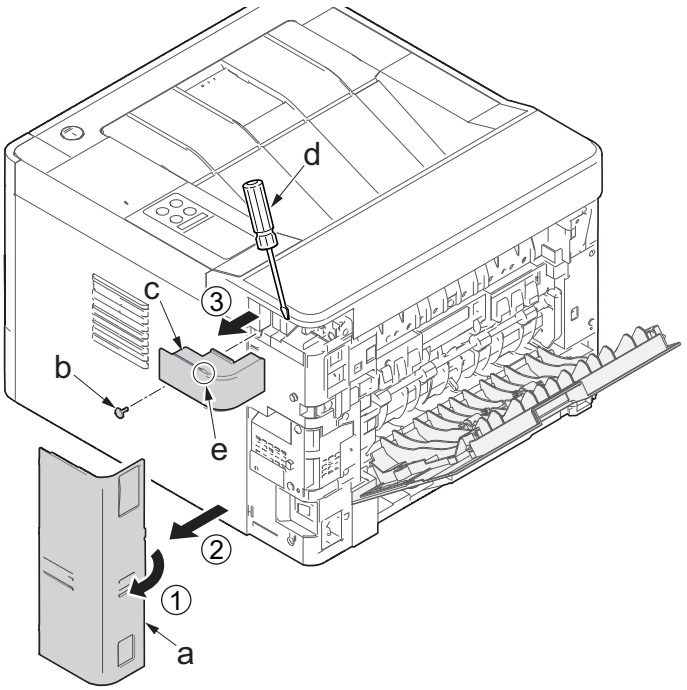

9. Remove two screws(M3×10TP)(a).
10. Release two hooks (b) of the upper rear cover(c) and detach it.

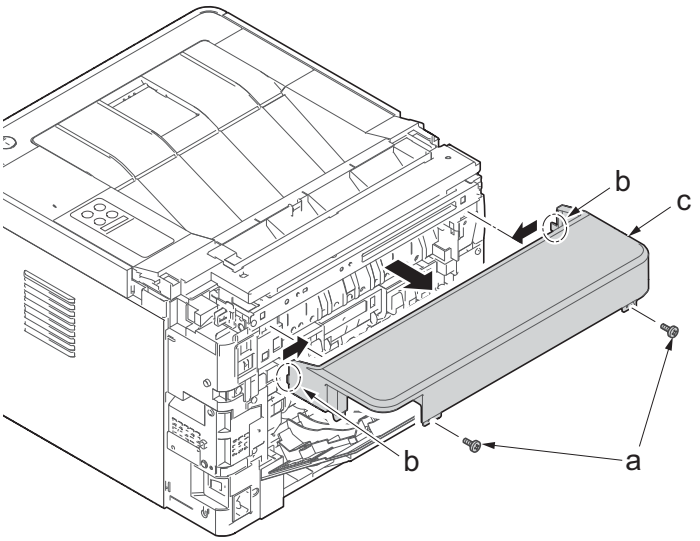

11. Pull out the cassette
12. Open the front cover (a).
13. Twist three hooks (b) at the rear side of the right cover (a) to detach it.
14. Release two hooks by using a flat-head screwdriver (c).

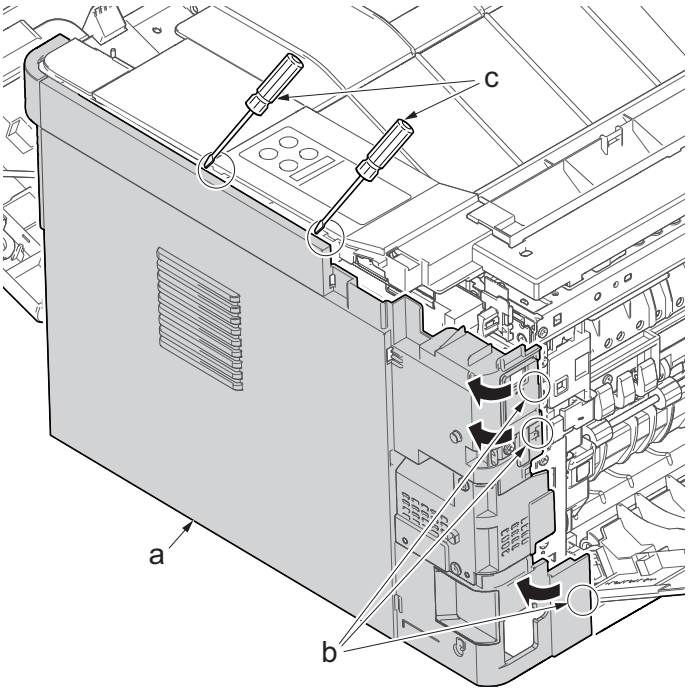

15. Release three hooks by using a flat-head screwdriver (d).
16. Twist two hooks (c) at the front side of the right cover (b) to release them and detach the right cover (b).

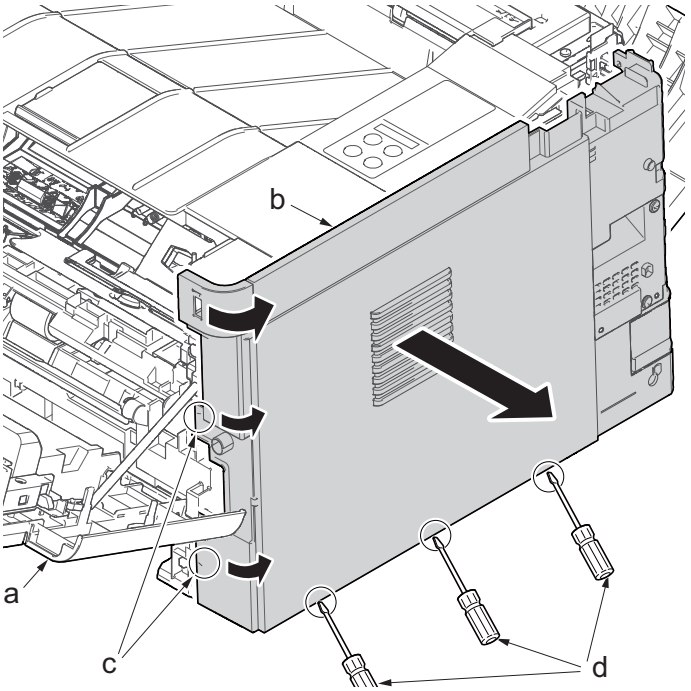

17. Detach one screw (b)(M3×12 P tight), and release two hooks (c) using the flat-driver.
18. Disconnect the connector (d), and detach the wall drive assy (a).
19. Check the wall drive assy (a), and clean or replace it.
20. Reattach the parts in the original position.

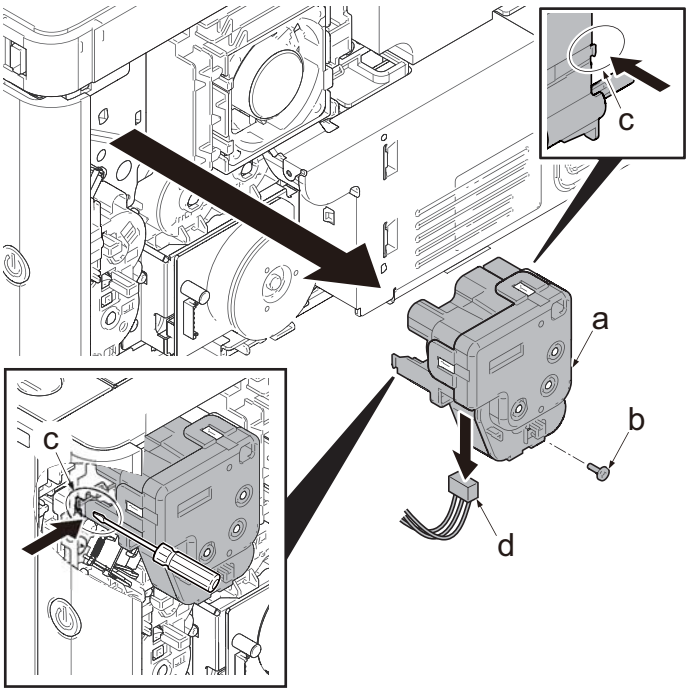

(3-4)Detaching and reattaching the MP solenoid (front side)

Procedures

1. Slightly pull out the cassette
2. Open the rear cover (a).
3. Open the cassette cover (c) and release the hook (d) of the left rear cover (b) in the direction of the arrow.
4. Twist the rear left cover (b) to release the hook (e) and detach it.

Attention:
The direction of hook (d) or (e) is reverse. Pay attention to the damage when detaching.

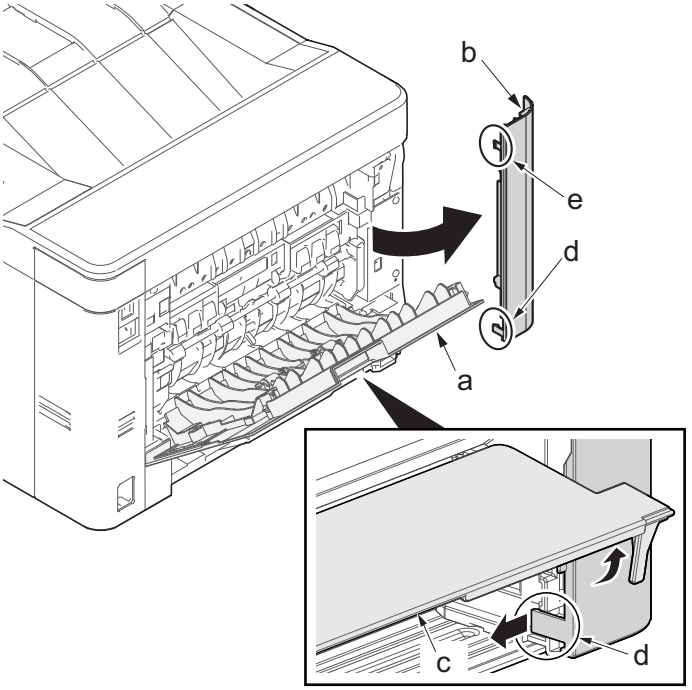

5. Detach the right rear cover (a) while twisting it.
6. Remove the screw(M3×10TP)(b).
7. Release the protrusion (e) by using a flat-blade screwdriver (d).
8. Detach the Wi-Fi cover(c).

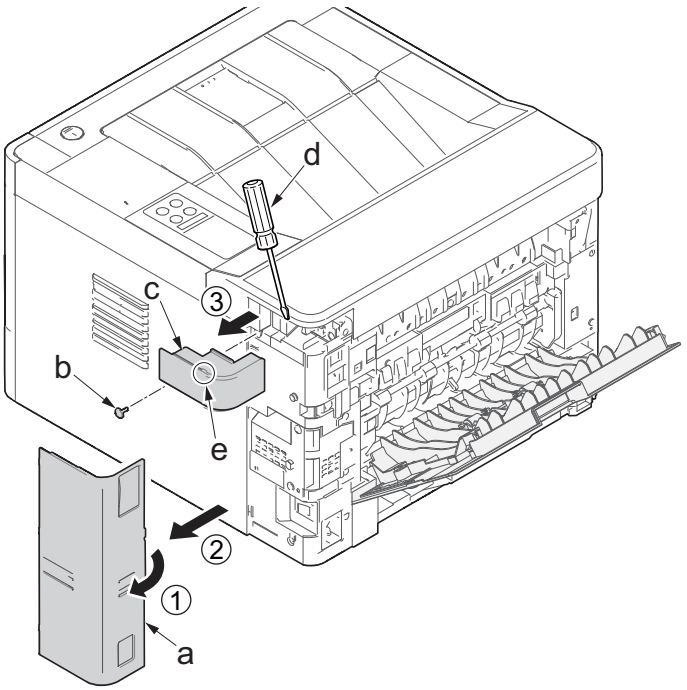

9. Remove two screws(M3×10TP)(a).
10. Release two hooks (b) of the upper rear cover(c) and detach it.

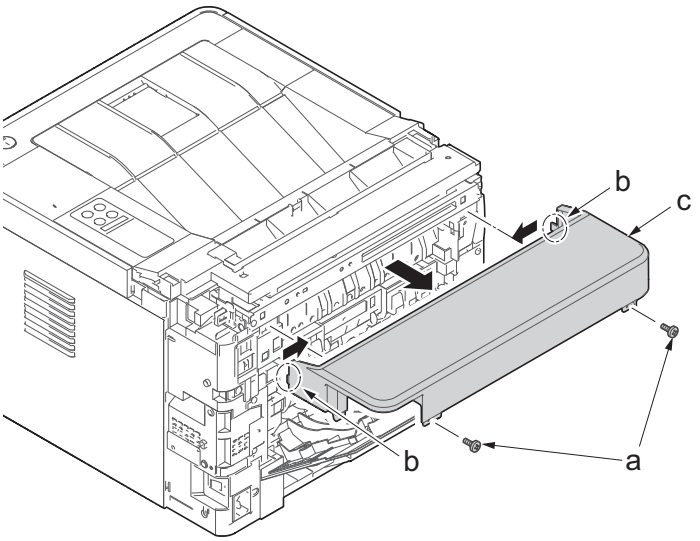

11. Pull out the cassette
12. Open the front cover (a).
13. Twist three hooks (b) at the rear side of the right cover (a) to detach it.
14. Release two hooks by using a flat-head screwdriver (c).

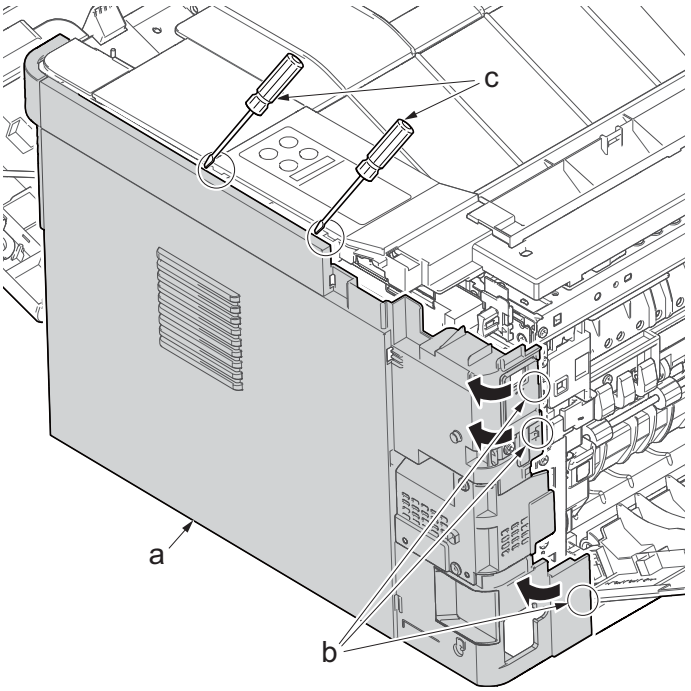

15. Release three hooks by using a flat-head screwdriver (d).
16. Twist two hooks (c) at the front side of the right cover (b) to release them and detach the right cover (b).

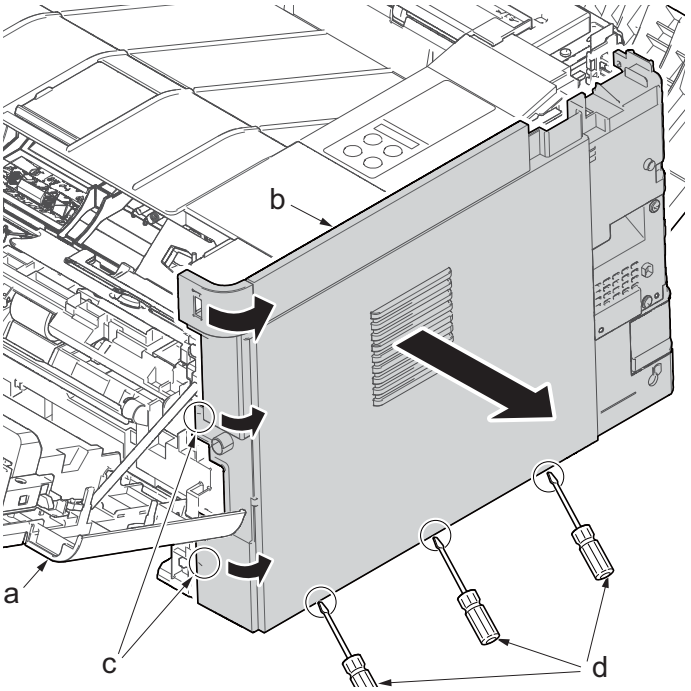

17. Detach one screw (b)(M3×12 P tight), and release two hooks (c) using the flat-driver.
18. Disconnect the connector (d), and detach the wall drive assy (a).

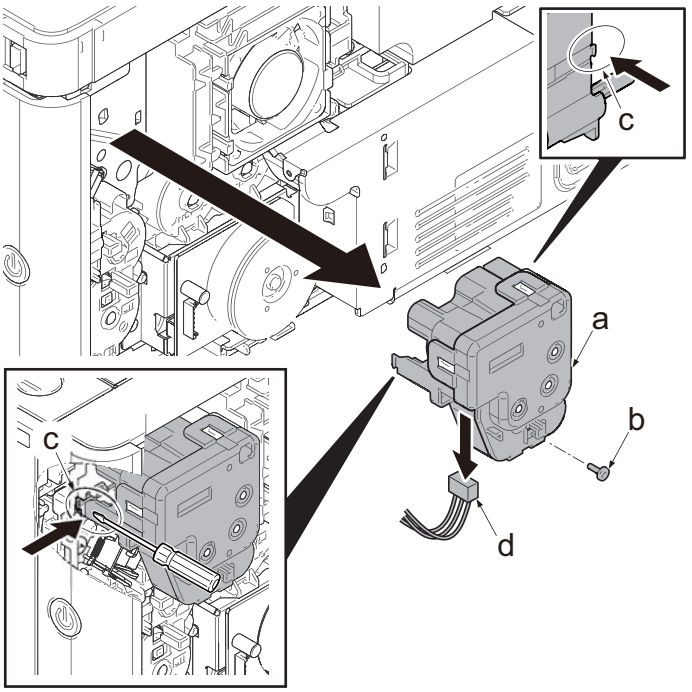

19. Disconnect the connector (a), and detach one screw (M3x8S tight)(b).
20. Detach the MP solenoid (c).
21. Check the MP solenoid (c), and clean or replace it.
22. Reattach the parts in the original position.

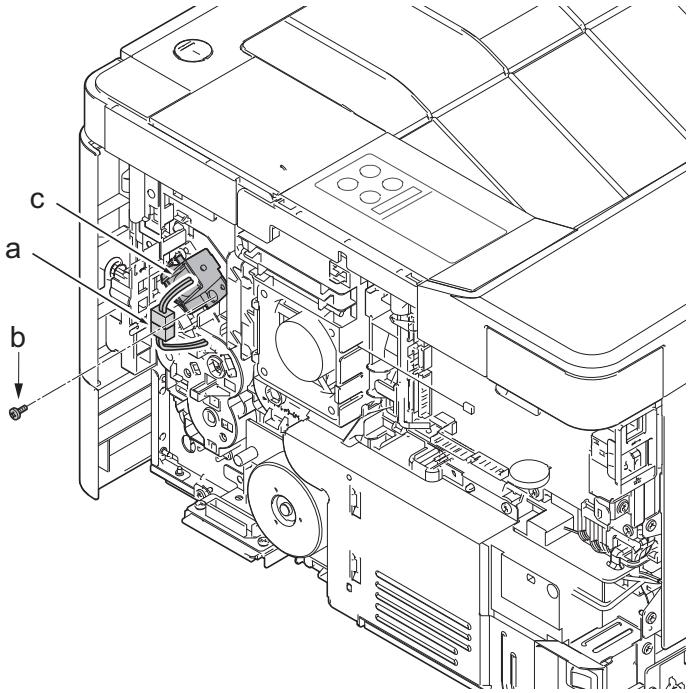

(3-5)Detaching reattaching the clutch.

Procedures

1. Slightly pull out the cassette
2. Open the rear cover (a).
3. Open the cassette cover (c) and release the hook (d) of the left rear cover (b) in the direction of the arrow.
4. Twist the rear left cover (b) to release the hook (e) and detach it.

Attention:
The direction of hook (d) or (e) is reverse. Pay attention to the damage when detaching.

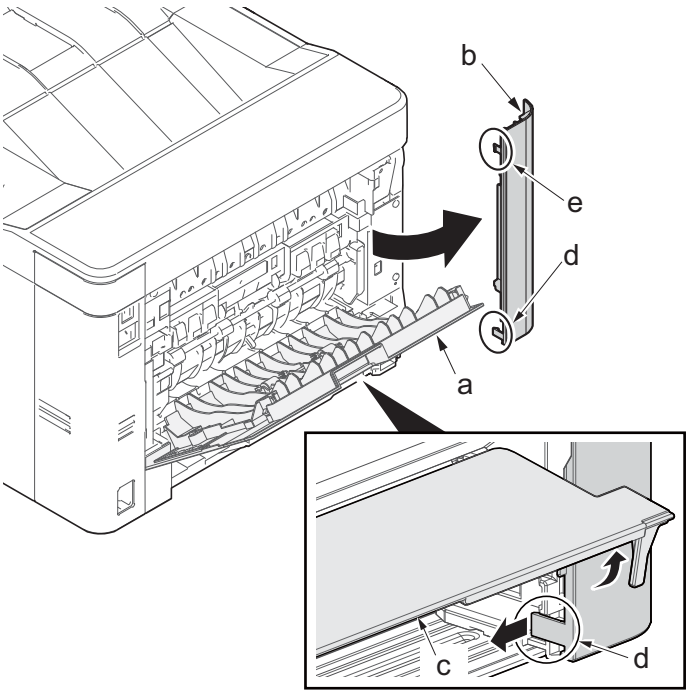

5. Detach the right rear cover (a) while twisting it.
6. Remove the screw(M3×10TP)(b).
7. Release the protrusion (e) by using a flat-blade screwdriver (d).
8. Detach the Wi-Fi cover(c).

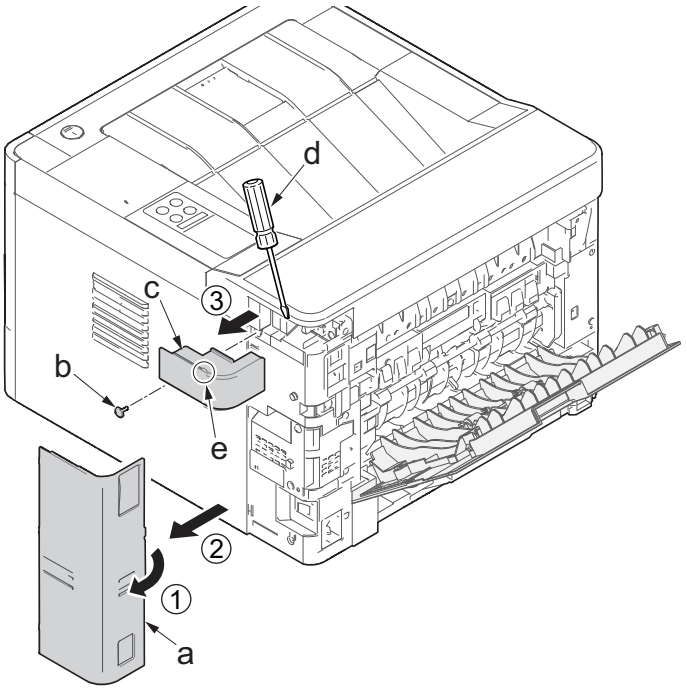

9. Remove two screws(M3×10TP)(a).
10. Release two hooks (b) of the upper rear cover (c) and detach it.

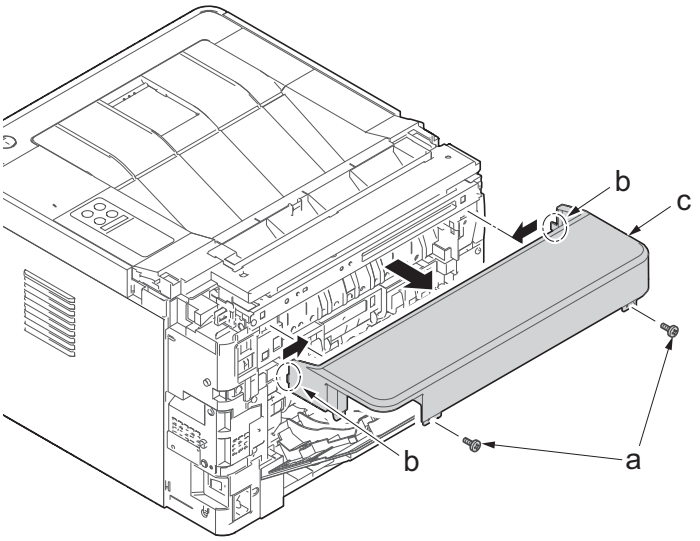

11. Pull out the cassette
12. Open the front cover (a).
13. Twist three hooks (b) at the rear side of the right cover (a) to detach it.
14. Release two hooks by using a flat-head screwdriver (c).

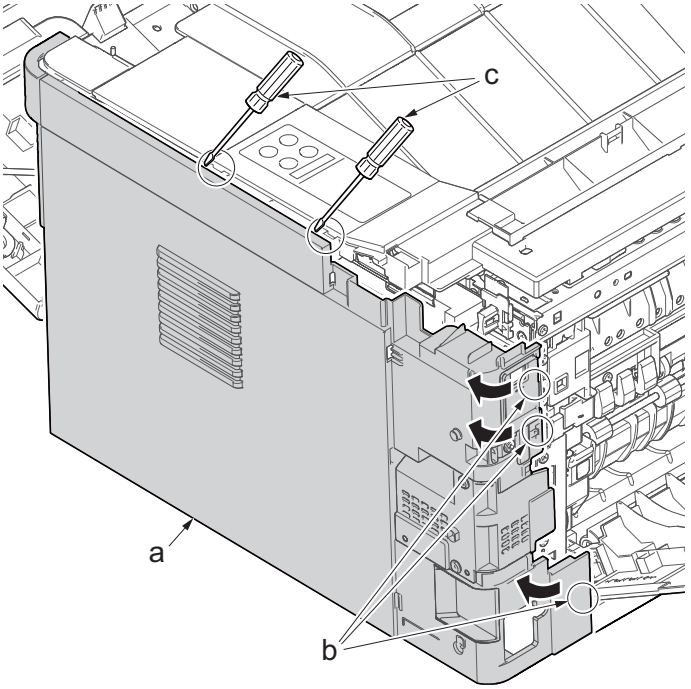

15. Release three hooks by using a flat-head screwdriver (d).
16. Twist two hooks (c) at the front side of the right cover (b) to release them and detach the right cover (b).

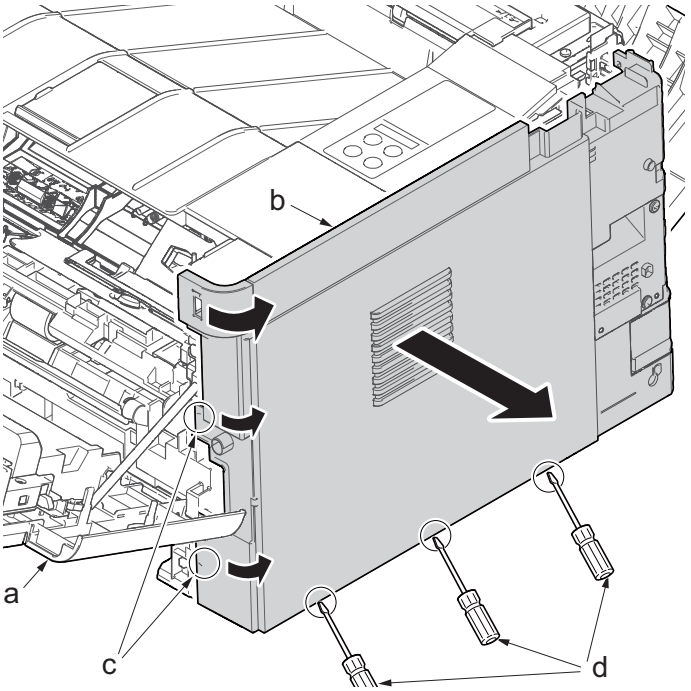

17. Detach one screw (b)(M3×12 P tight), and release two hooks (c) using the flat-driver.
18. Disconnect the connector (d), and detach the wall drive assy (a).

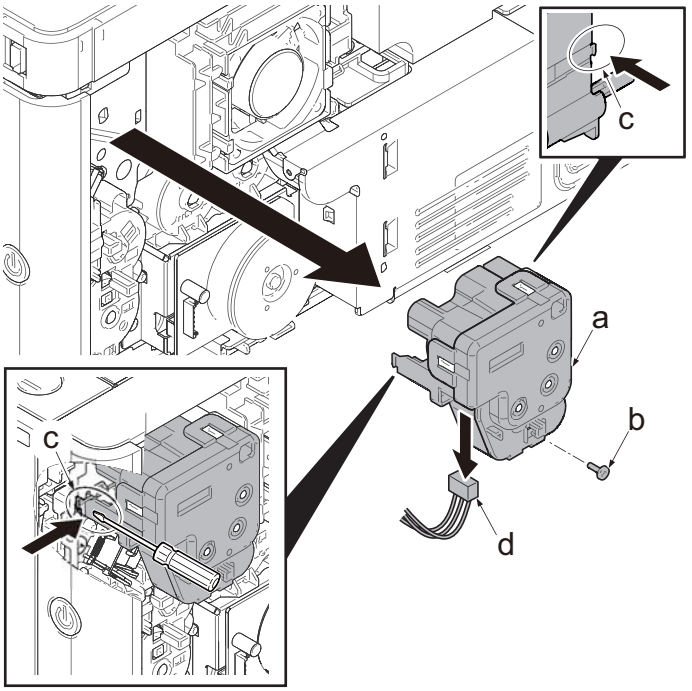

19. Disconnect three connector(a) of each clutch.

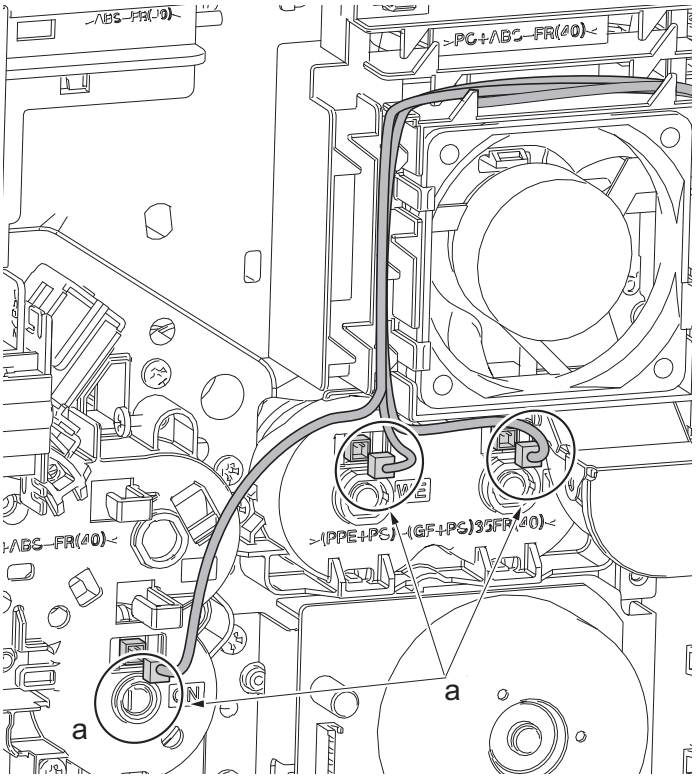

20. Remove two screws(M3x8S tight)(a), detach the clutch cover(b).
21. Detach the developer clutch (c) and registration clutch (d).

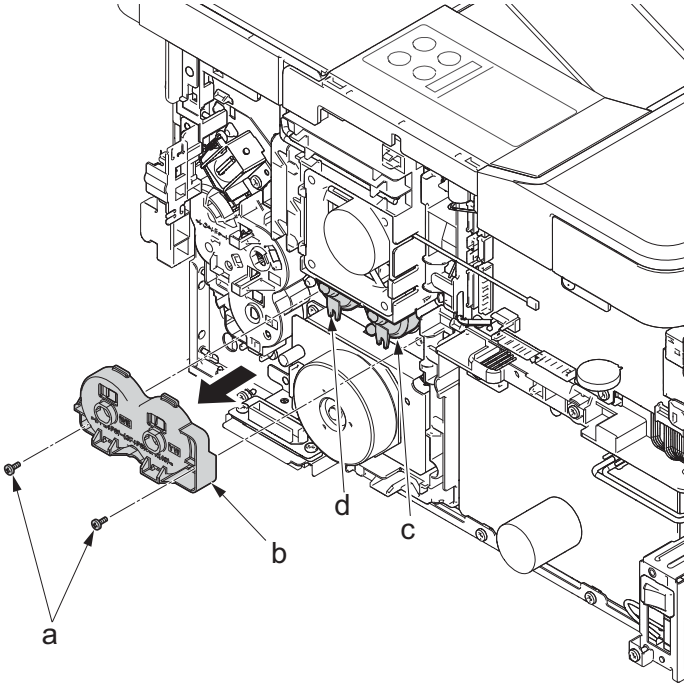

22. Remove the screw(M3x12P tight)(a) and deatch the power switch(b).

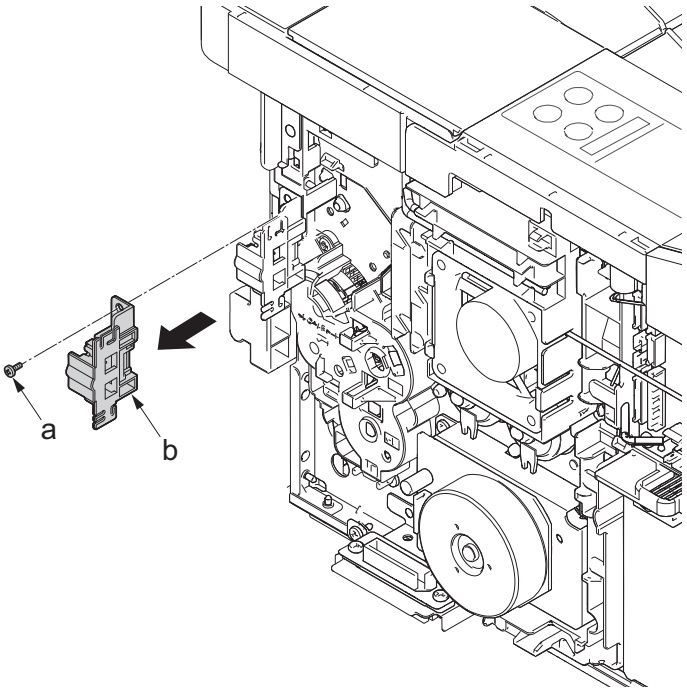

23. Remove three screws(M3x8S tight)(a) and remove the cover (b).
24. Detach the paper feed clutch (c).
25. Check or replace the clutch, and reattach the parts which are detached in the original position.

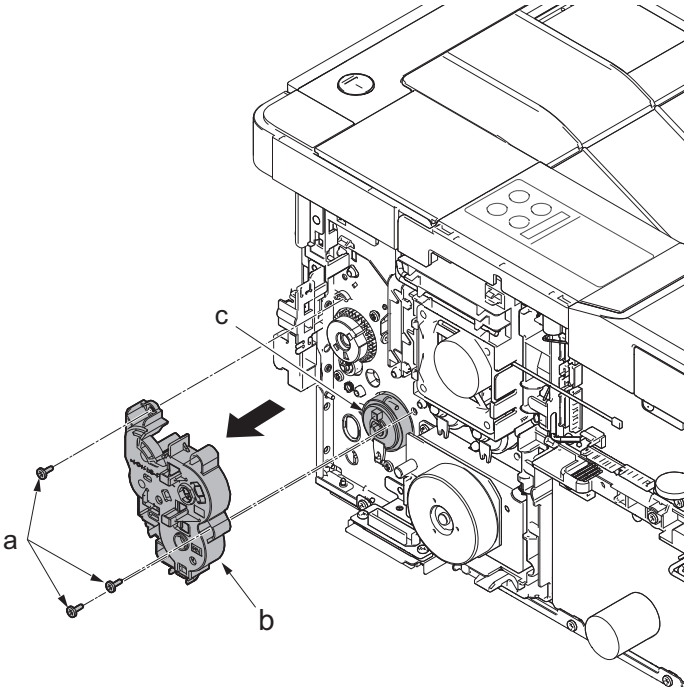

*: Attach the developer clutch (a) and the registration clutch (b) with the notches (c) facing down, and attach the cover.

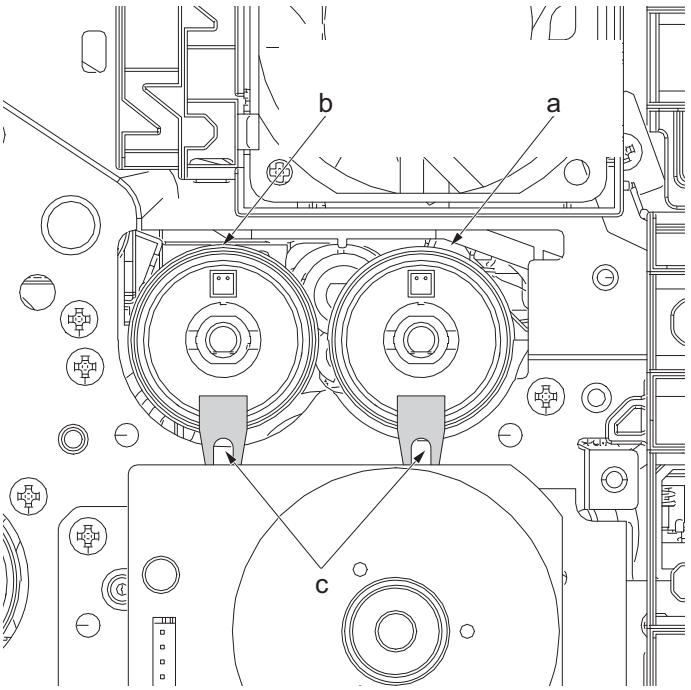

(3-6)Detaching and reattaching the eject solenoid

Procedures

1. Slightly pull out the cassette
2. Open the rear cover (a).
3. Open the cassette cover (c) and release the hook (d) of the left rear cover (b) in the direction of the arrow.
4. Twist the rear left cover (b) to release the hook (e) and detach it.

Attention:
The direction of hook (d) or (e) is reverse. Pay attention to the damage when detaching.

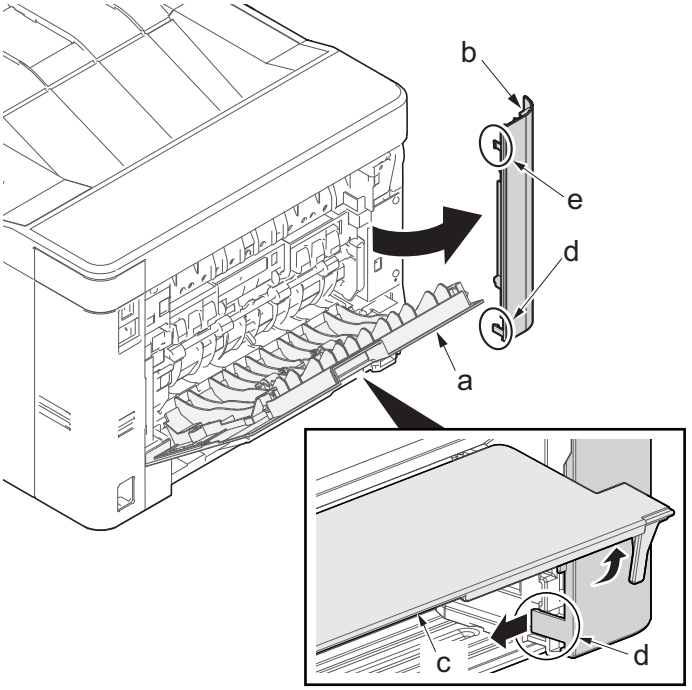

5. Detach the right rear cover (a) while twisting it.
6. Remove the screw(M3×10TP)(b).
7. Release the protrusion (e) by using a flat-blade screwdriver (d).
8. Detach the Wi-Fi cover(c).

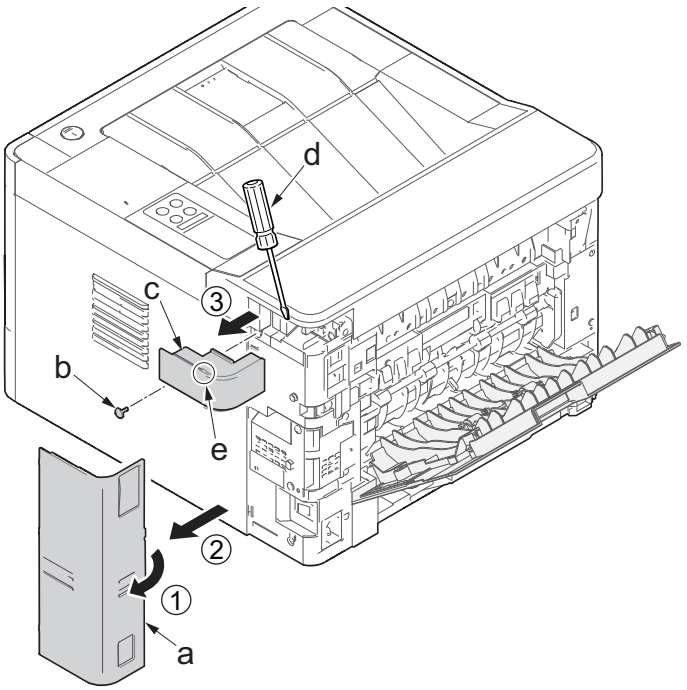

9. Remove two screws(M3×10TP)(a).
10. Release two hooks (b) of the upper rear cover (c) and detach it.

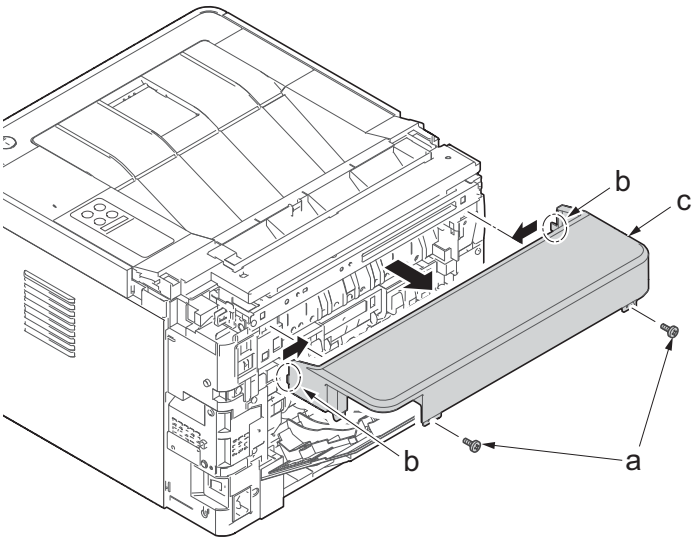

11. Pull out the cassette
12. Open the front cover (a).
13. Release four hooks (b) at the front side of the left cover(a).

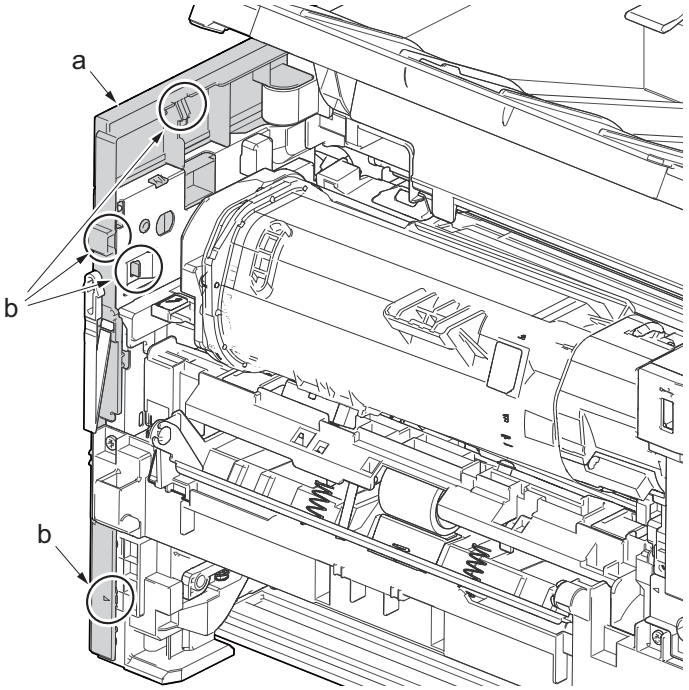

14. Release two hooks (b) at the rear side of the left cover (a).
15. While tilting the left cover (a), detach it in the direction of the arrow.

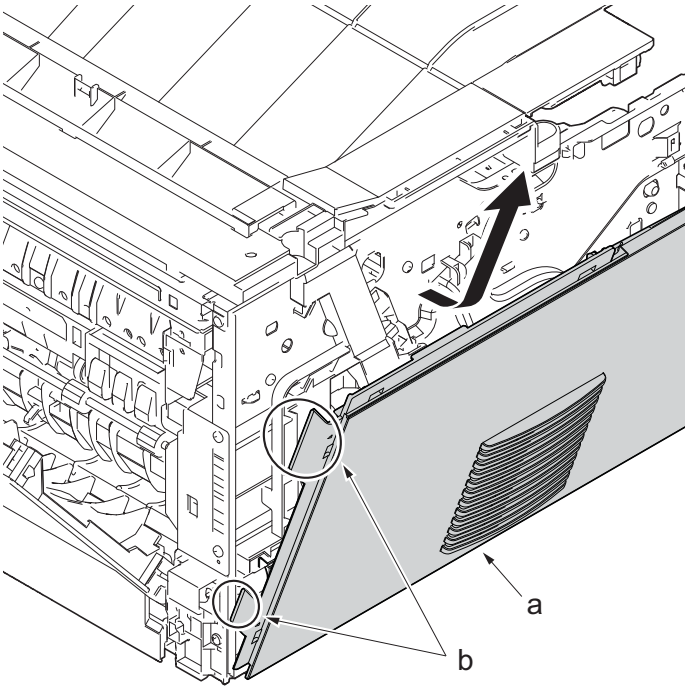

16. Twist three hooks (b) at the rear side of the right cover (a) to detach it.
17. Release two hooks by using a flat-head screwdriver (c).

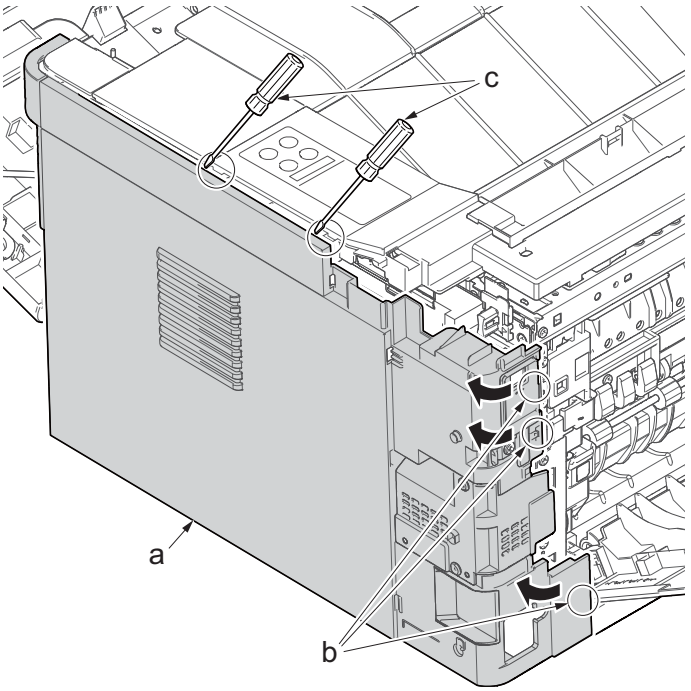

18. Release three hooks by using a flat-head screwdriver (d).
19. Twist two hooks (c) at the front side of the right cover (b) to release them and detach the right cover (b).

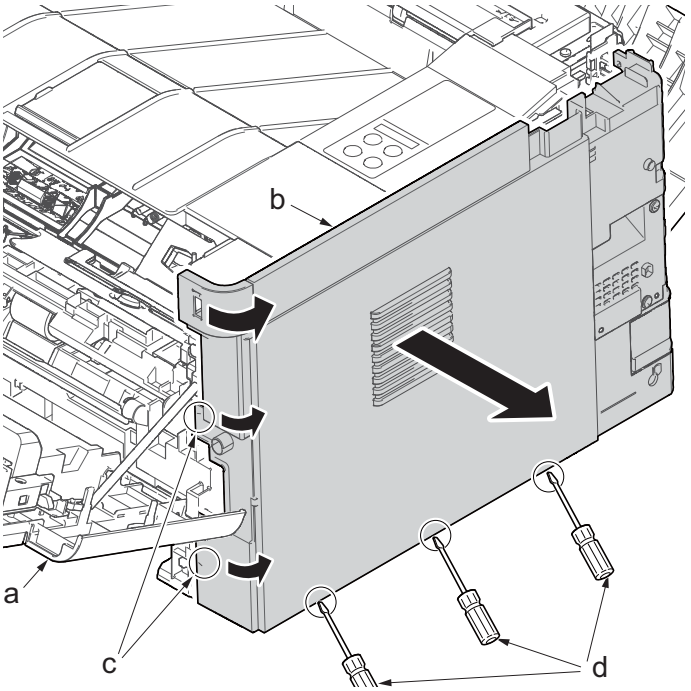

20. Disconnect the connector (b) from the main PWB (a).
21. Detach the wires (d) from the hooks of the wire guides (c).

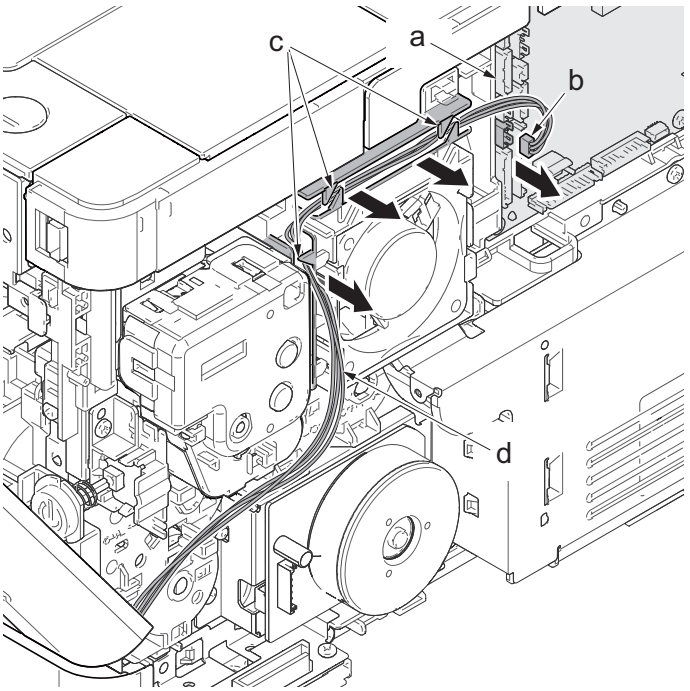

22. Open the front cover (a) and detach two straps (b) by using pliers (c).

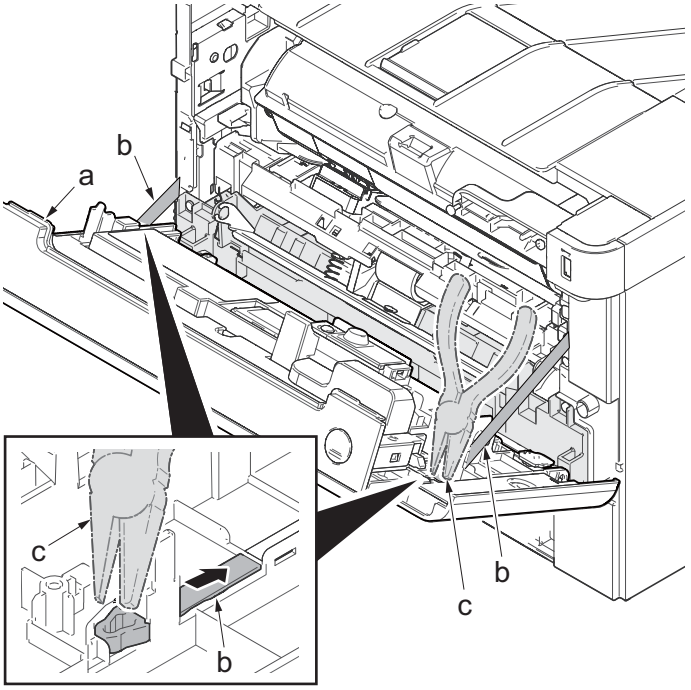

23. Open the front cover (a) to the bottom and detach the left side of cover fulcrum from the fulcrum shaft (b).
24. Release the right side of fulcrum portion (c) and detach the front cover (a).

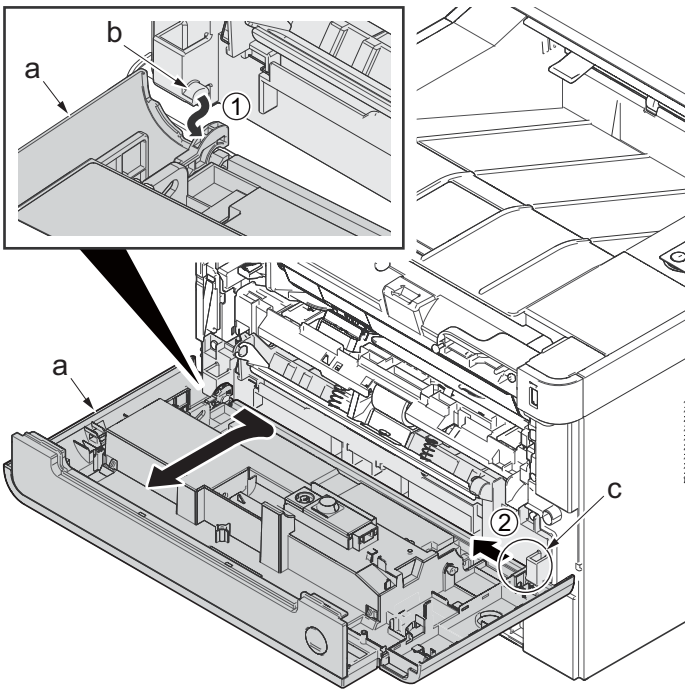

25. Open the rear cover (a) to align it to the position of the shaft (b) and detach it from the fulcrum (c) in the direction of the arrow.

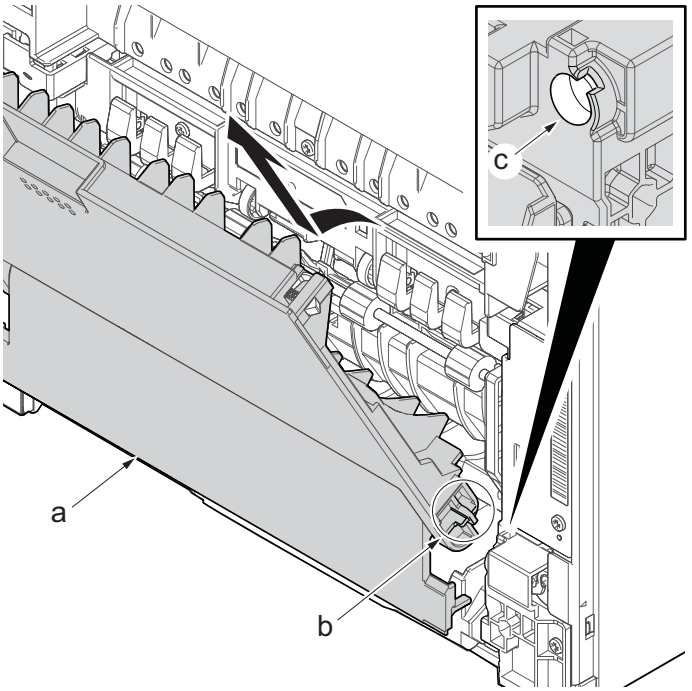

26. Open the top cover (a).
27. Remove the screws(M3x8S tight)(b), detach the right middle cover(c).

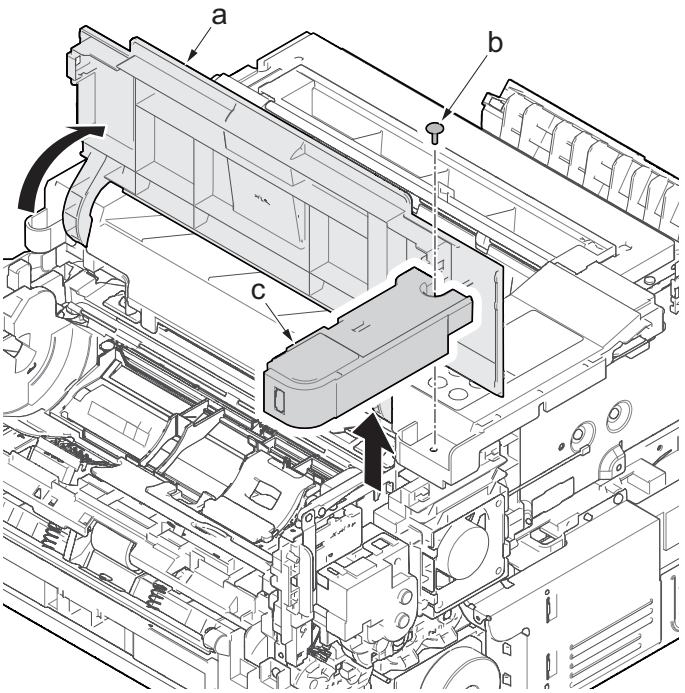

28. Remove two screws(M3×8TP)(a) and remove the eject tray(b).

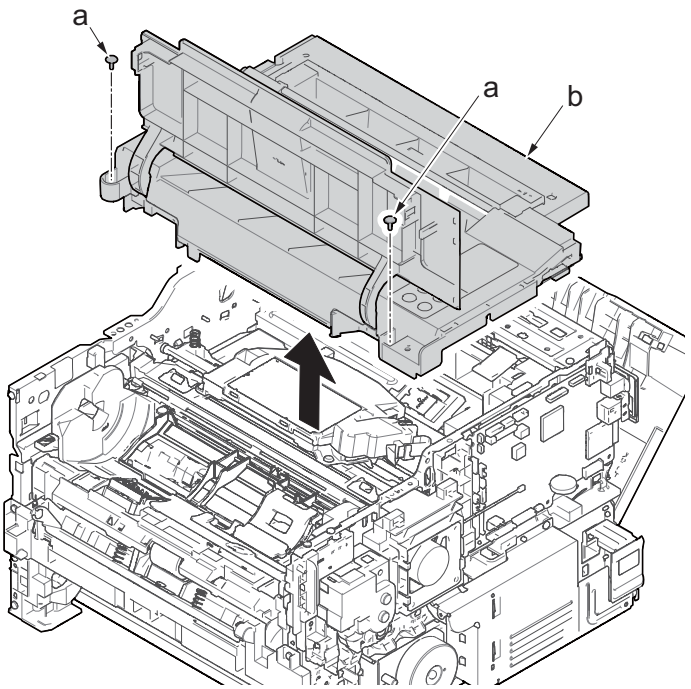

29. Remove four screws(M3x8S tight)(a) and remove the back side of metallic plate (b).

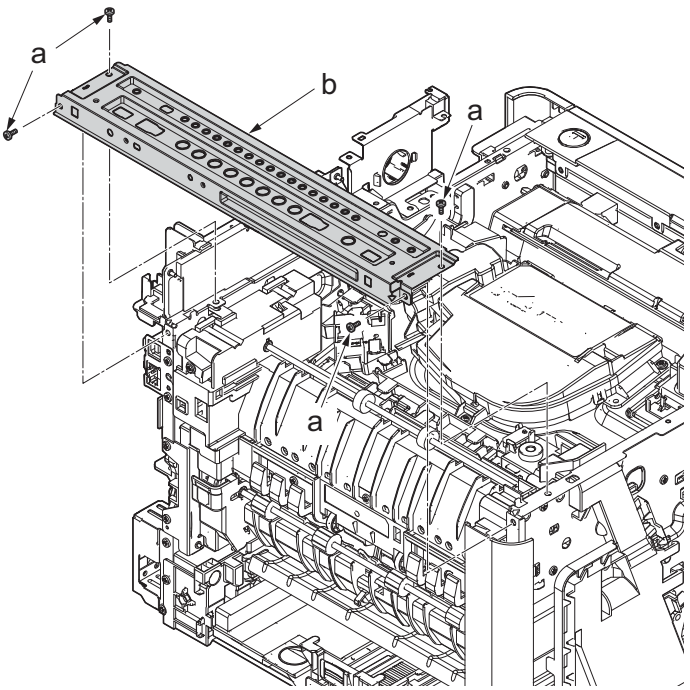

30. Disconnect the connector (a).

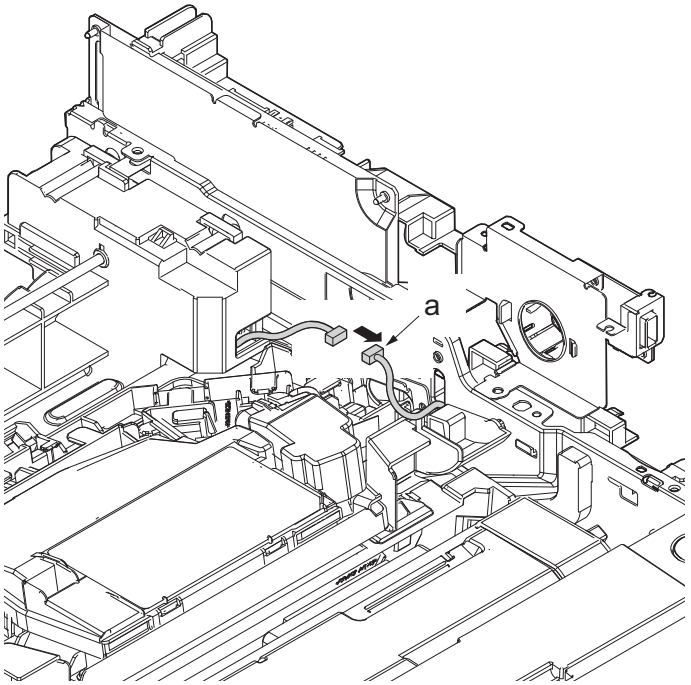

31. Remove the screw(M3×8S tight)(a).
32. Remove the screw(M3×8P tight)(b).

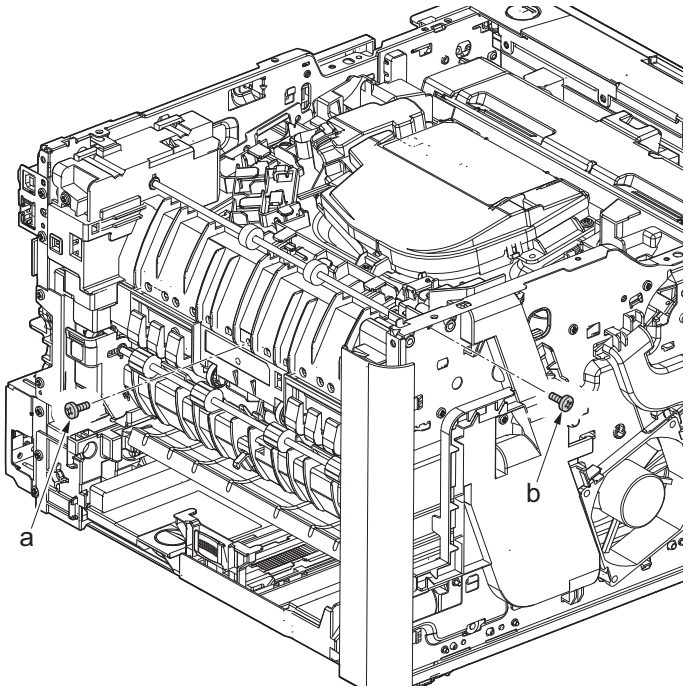

33. Detach the eject unit (a) in the direction of the arrow.

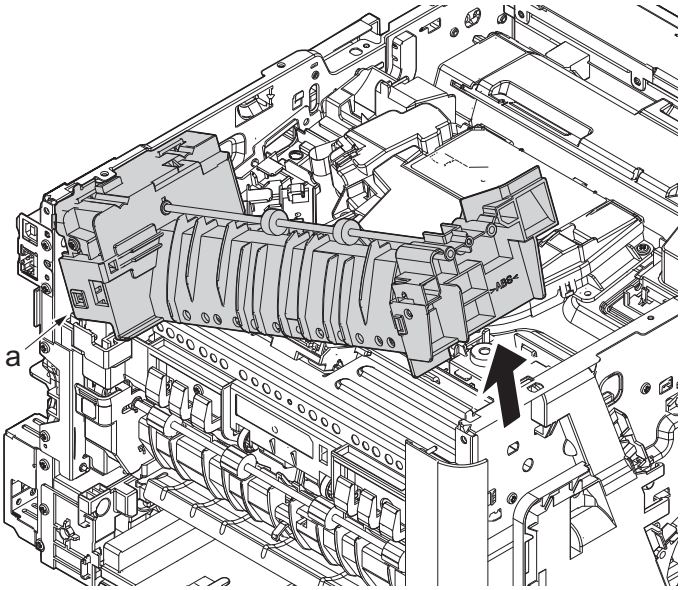

34. Release two hooks(b) and detach the eject unit cover (a).
35. Remove the screw (c) (M3×4P tight).
36. Remove the eject solenoid (d).
37. Check or replace the eject unit(d), and reattach the parts which are detached in the original position.

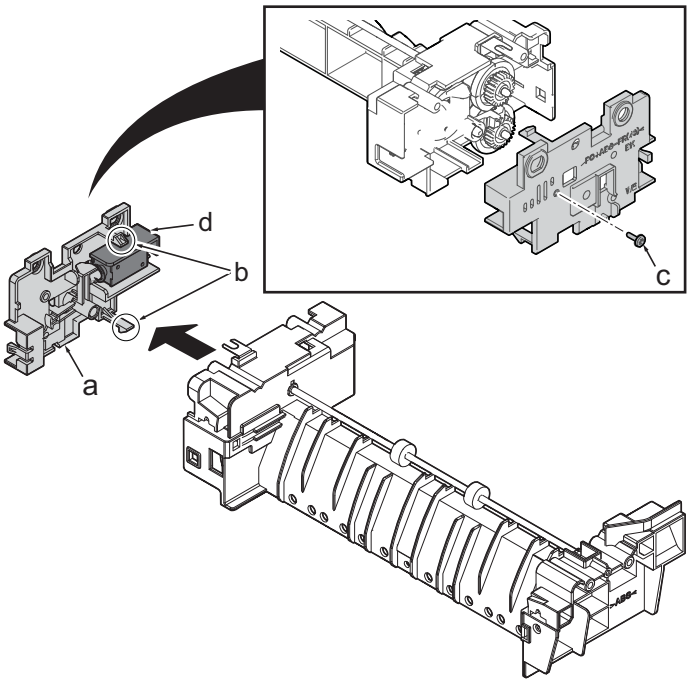

(4) Others

(4-1)Detaching and reattaching the eraser

Procedures

1. Open the front cover (a).
2. Open the top cover (b).

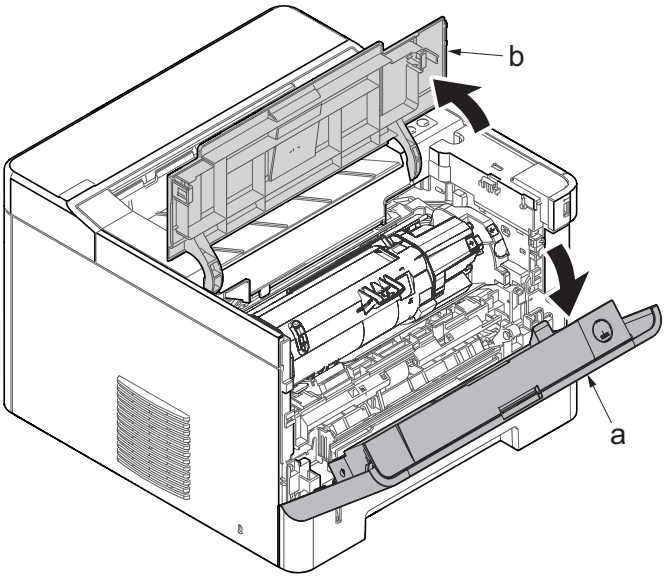

3. Push down the developer release lever (b).
4. Detach the developer unit (a).

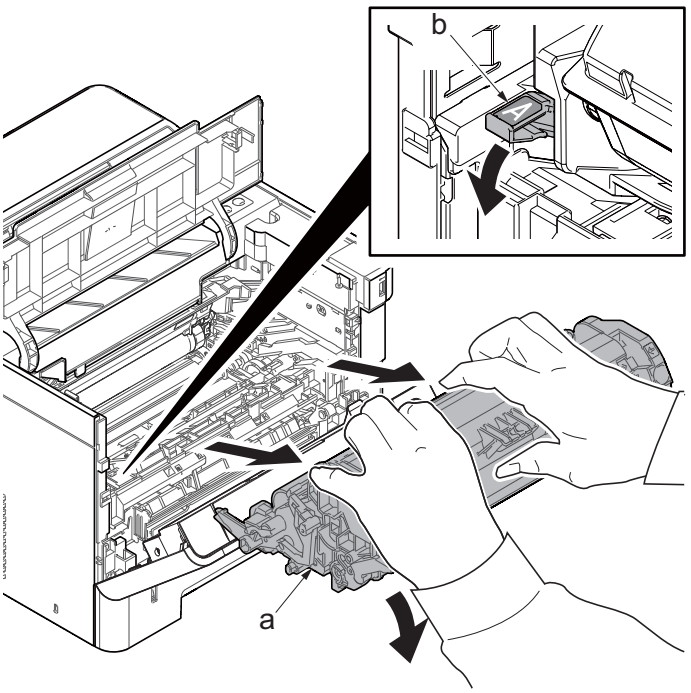

5. Detach the drum unit (a).

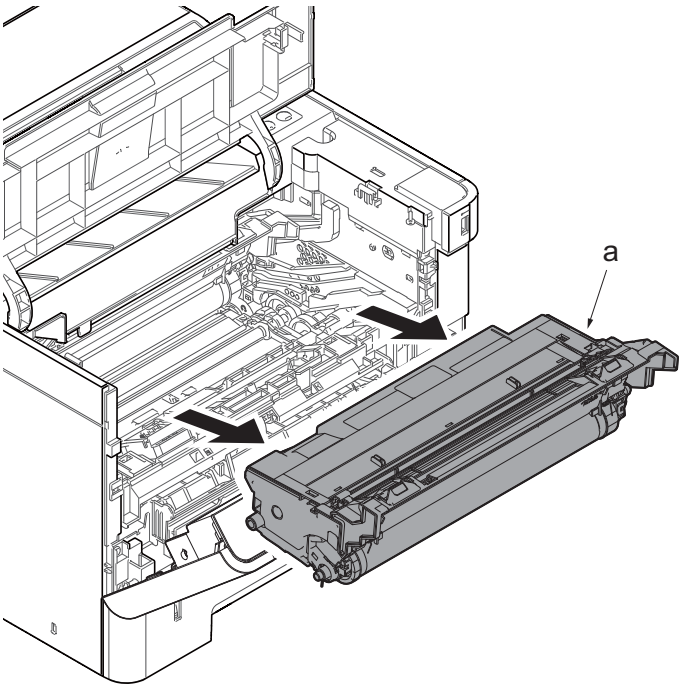

6. While taking care of both side of springs, remove the eraser assembly (a).
7. Check the eraser PWB, and clean or replace it.
8. Reattach the parts in the original position.

*: Attach the spring by hooking on the protrusion at the main unit.
*: When reattaching the eraser assembly, hook it the protrusion of the main unit.

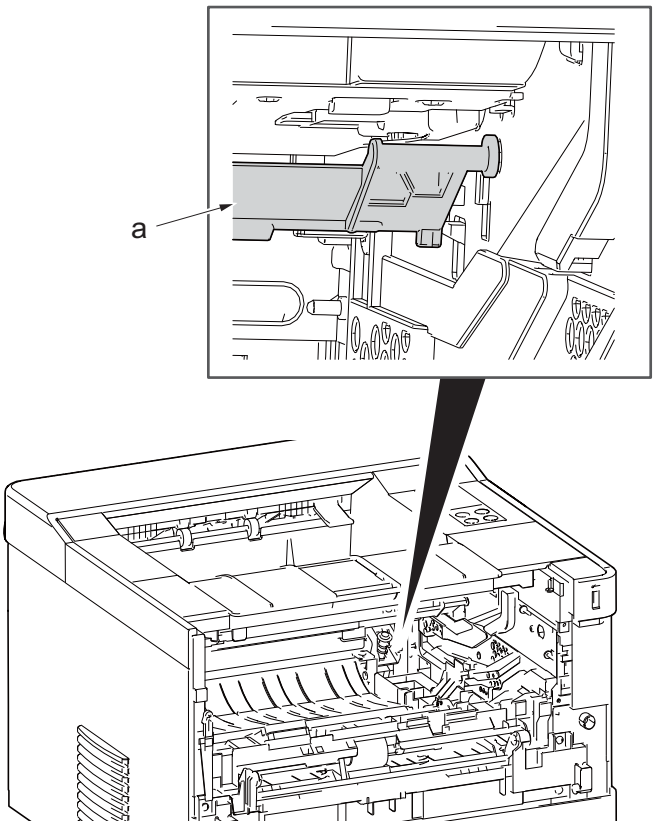

(4-2)Fan motor attachment direction

Detaching and attaching are available by detaching the outer covers.

*: When reattaching the fan motor (a), be aware of the attachment direction (intake/exhaust).

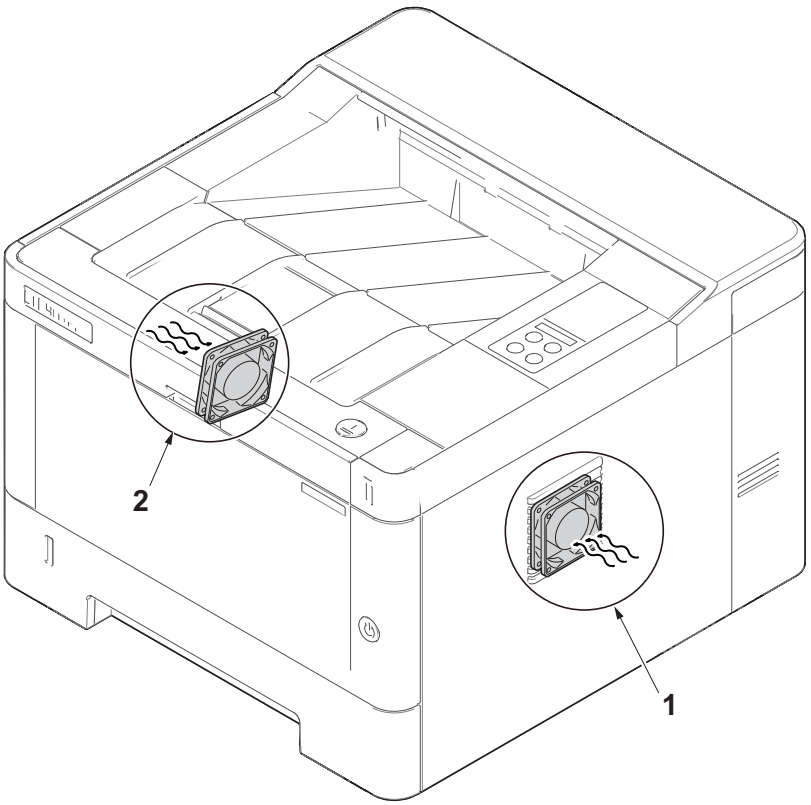

1. Right side fan motor : Intake (Rating label inside)
2. Left side fan motor : Intake (Rating label inside)

(5) PWBs

*: Before replacing the PWB, be sure to take the following procedures.
Otherwise, The PWB may be damaged.
- Disconnect the power cord.
- Press the power switch one second or more to discharge the electric charge inside the main unit.

(5-1)Detaching and reattaching the main/engine PWB

Procedures

1. Slightly pull out the cassette
2. Open the rear cover (a).
3. Open the cassette cover (c) and release the hook (d) of the left rear cover (b) in the direction of the arrow.
4. Twist the rear left cover (b) to release the hook (e) and detach it.

Attention:
The direction of hook (d) or (e) is reverse. Pay attention to the damage when detaching.

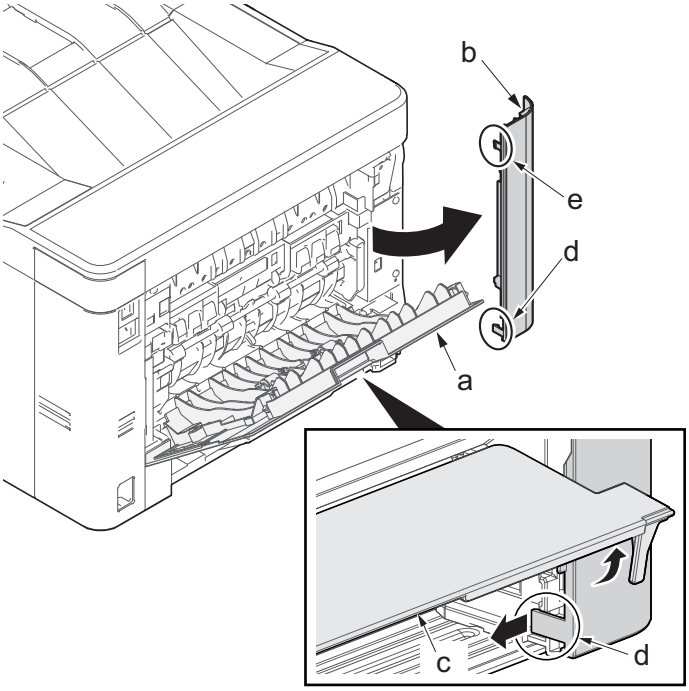

5. Detach the right rear cover (a) while twisting it.
6. Remove the screw(M3×10TP)(b).
7. Release the protrusion (e) by using a flat-blade screwdriver (d).
8. Detach the Wi-Fi cover(c).

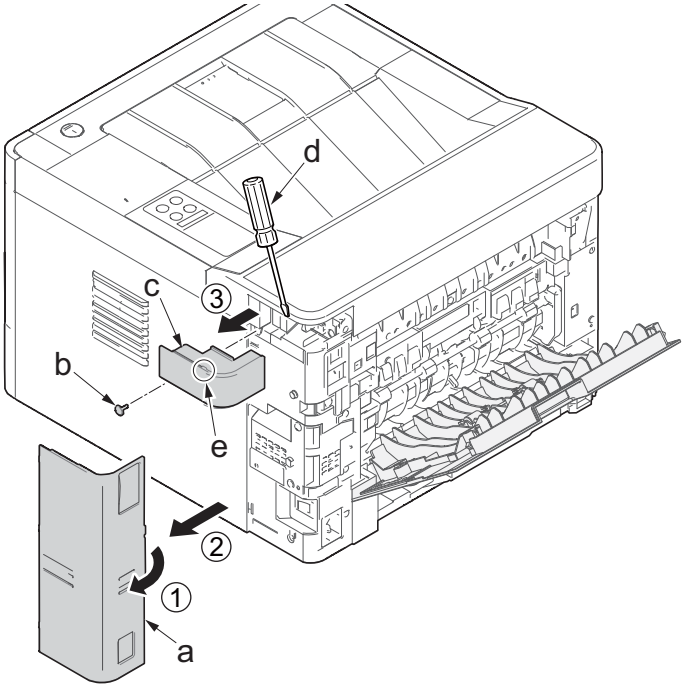

9. Remove two screws(M3×10TP)(a).
10. Release two hooks (b) of the upper rear cover (c) and detach it.

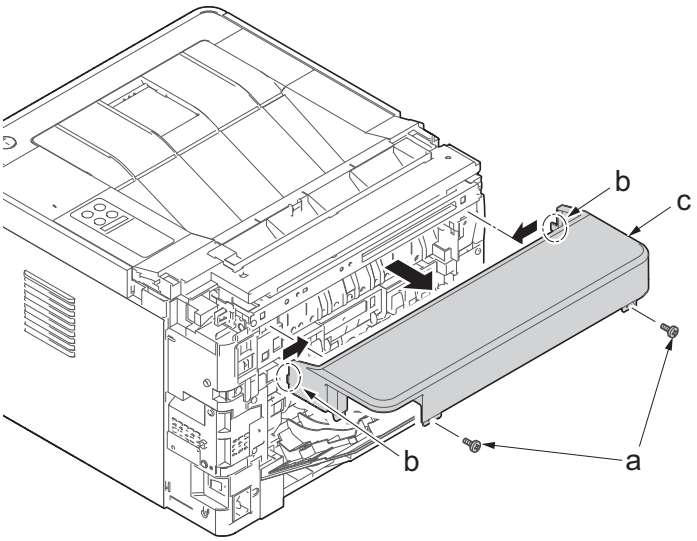

11. Pull out the cassette
12. Open the front cover (a).
13. Twist three hooks (b) at the rear side of the right cover (a) to detach it.
14. Release two hooks by using a flat-head screwdriver (c).

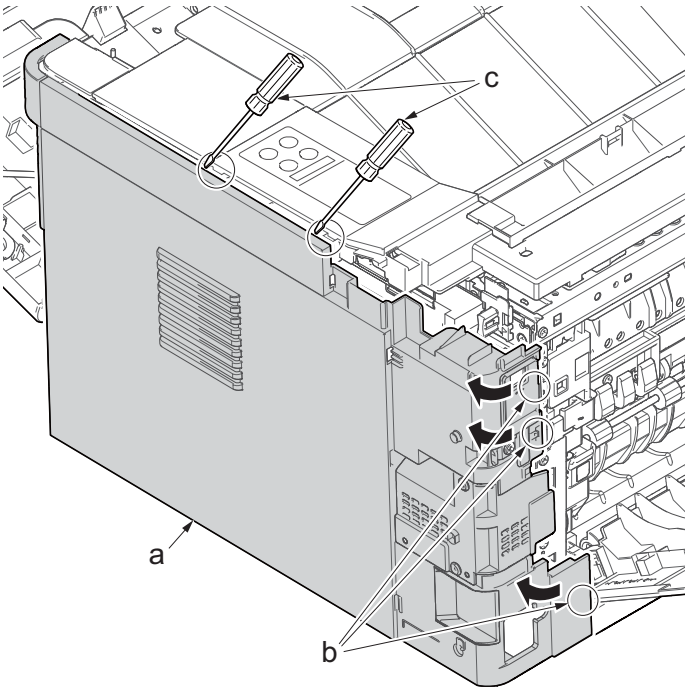

15. Release three hooks by using a flat-head screwdriver (d).
16. Twist two hooks (c) at the front side of the right cover (b) to release them and detach the right cover (b).

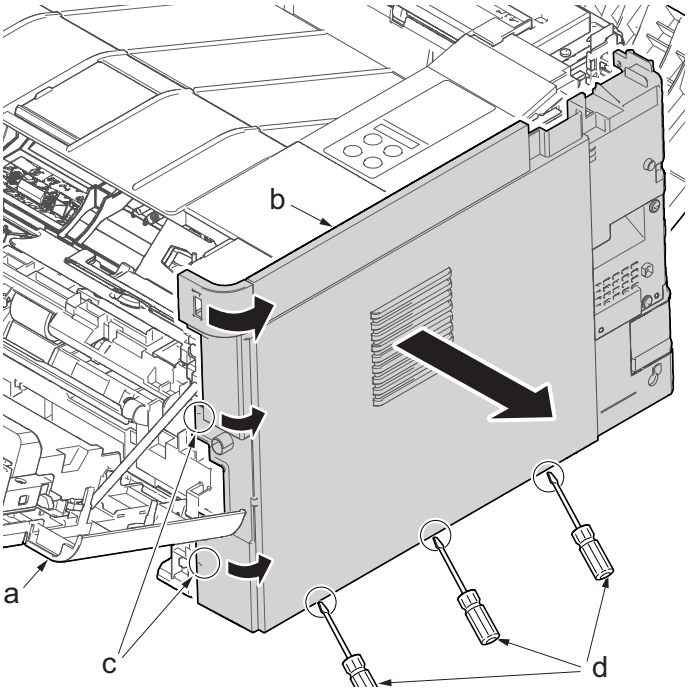

17. Remove two screws(M3x8S tight)(a) and detach the USB earth plate (b).
18. Disconnect all the connectors and FFCs from the main/engine PWB(c).

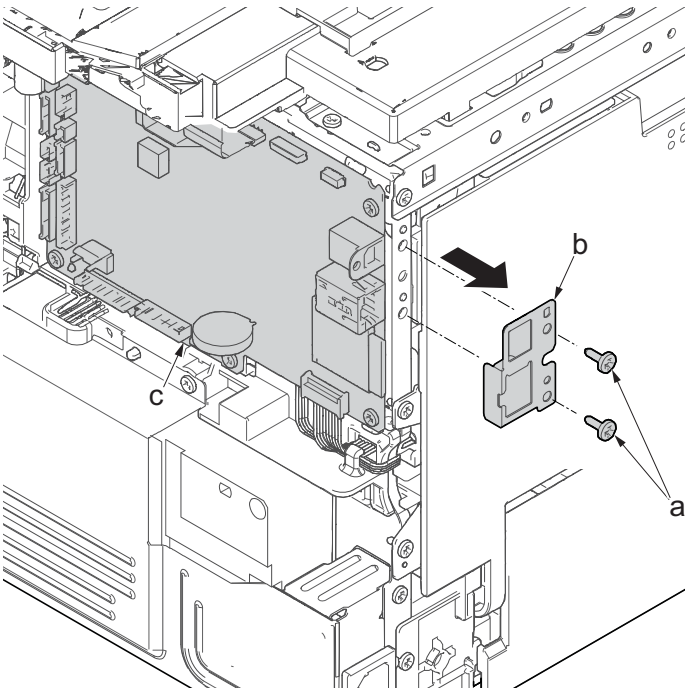

19. Remove five screws(M3×8S tight)(a).
20. Detach the main/ engine PWB (b).

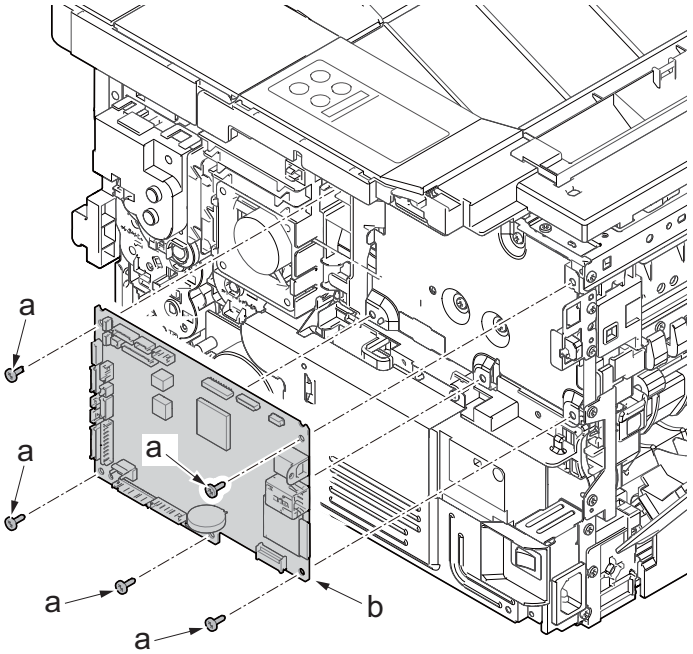

21. Check or replace the main/engine PWB (a), and then reattach the parts which are detached in the original position.

Attention: When replacing the main/engine PWB(a), remove EEPROM (YS1)(b) from it and reattach it to the new main/engine PWB(a).

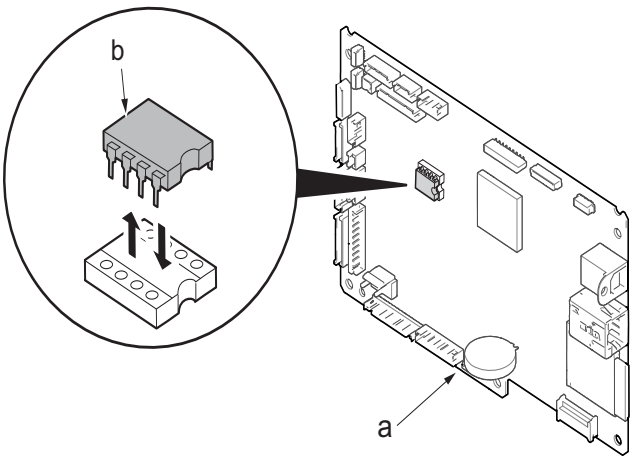

Note when replacing the main/engine PWB

When replacing the main/engine PWB, remove EEPROM (YS1) on the old PWB and make sure to place it on the new PWB.

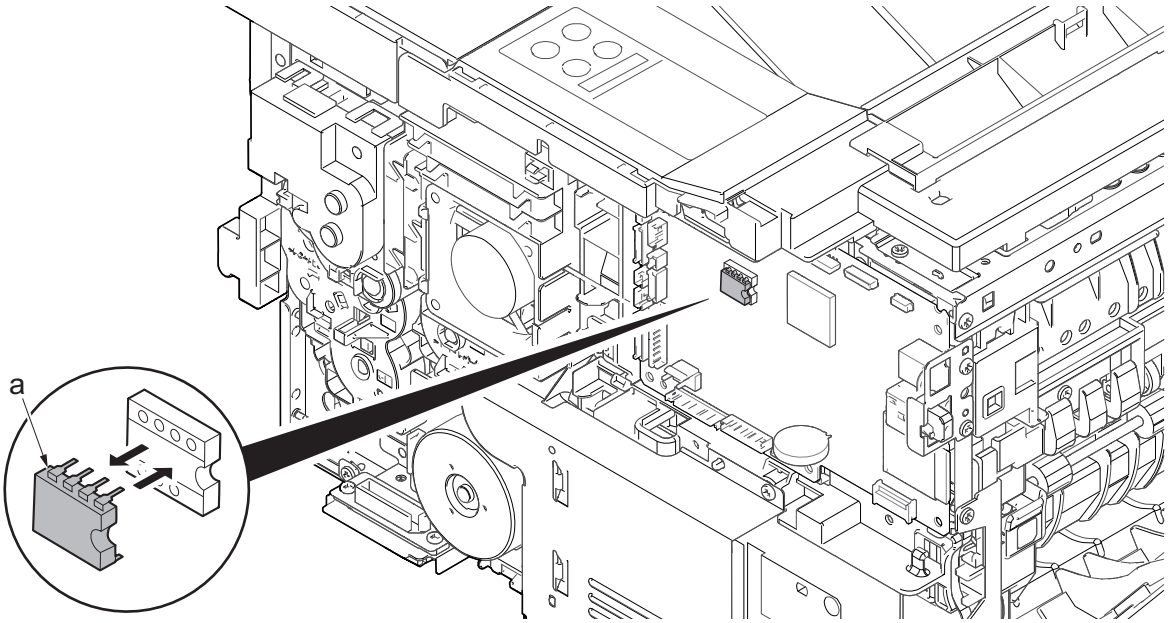

*: Check the network setting since the MAC address is changed.
Example: when the printer name is registered with the IP address, reconfigure the IP address.
*: Make sure to attach the Wi-Fi PWB on the old PWB of the Wi-Fi model to the new PWB.

After replacing the main/engine PWB, execute the following setting.

1. Firmware update (See page 5-1)
   *:Check the latest firmware and upgrade it.

2. Reactivating the license
   Reactivate the license when equipping the license of the optional product.
   (1)Card Authentication Kit (B)
   (2)UG-33 (ThinPrint)
   (3)Data Security Kit (E)
   *:Re-entering 4-digit encryption codes entered at setup is necessary.

(5-2)Detaching and reattaching the high voltage PWB

Procedures

1. Open the front cover (a).
2. Open the top cover (b).

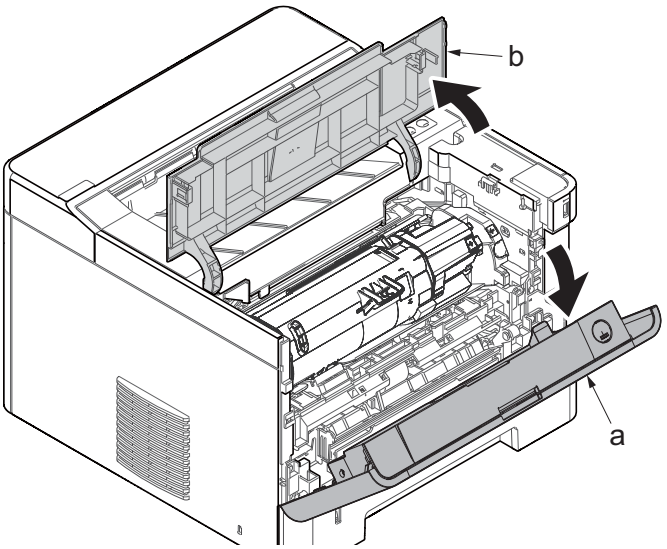

3. Push down the developer release lever (b).
4. Detach the developer unit (a).

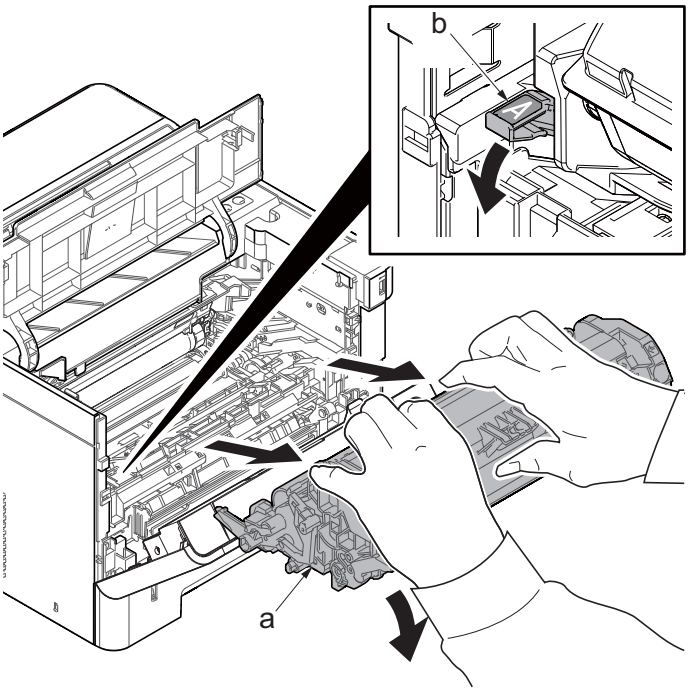

5. Detach the drum unit (a).

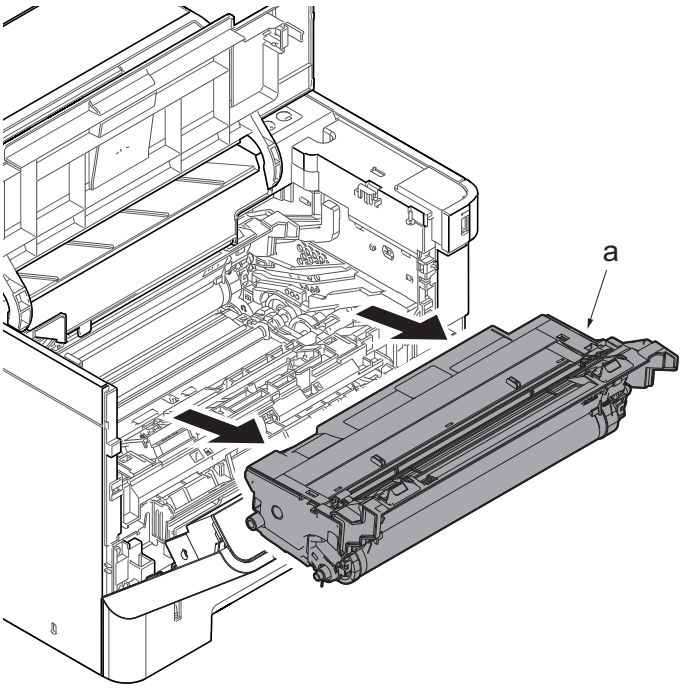

6. Slightly pull out the cassette
7. Open the rear cover (a).
8. Open the cassette cover (c) and release the hook (d) of the left rear cover (b) in the direction of the arrow.
9. Twist the rear left cover (b) to release the hook (e) and detach it.

Attention:
The direction of hook (d) or (e) is reverse. Pay attention to the damage when detaching.

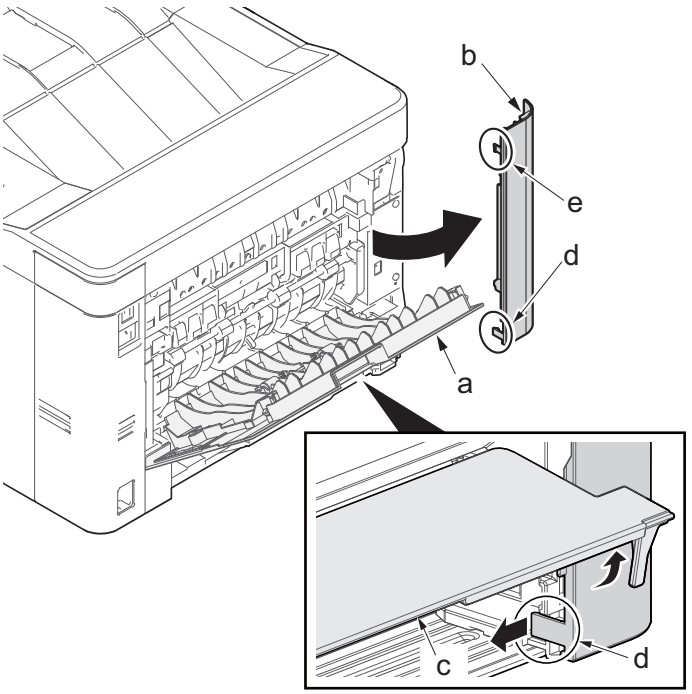

10. Detach the right rear cover (a) while twisting it.
11. Remove the screw(M3×10TP)(b).
12. Release the protrusion (e) by using a flat-blade screwdriver (d).
13. Detach the Wi-Fi cover(c).

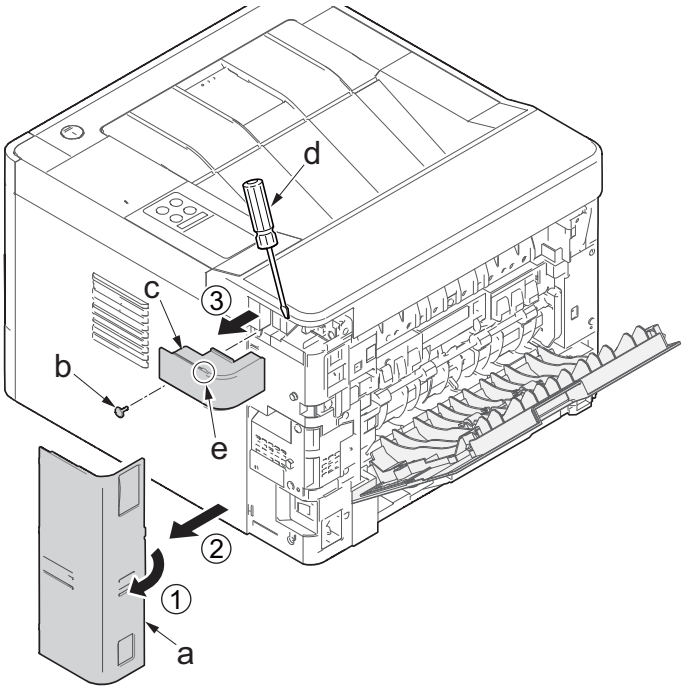

14. Remove two screws(M3×10TP)(a).
15. Release two hooks (b) of the upper rear cover (c) and detach it.

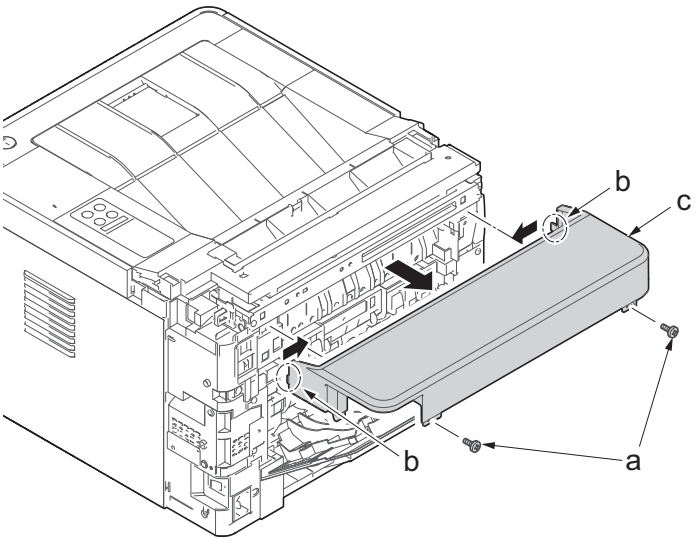

16. Release four hooks (b) at the front side of the left cover (a).

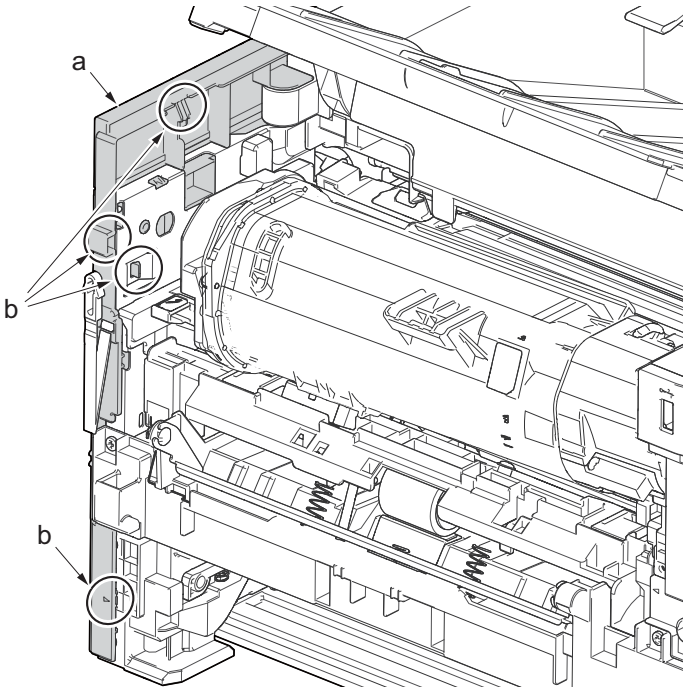

17. Release two hooks (b) at the rear side of the left cover (a).
18. While tilting the left cover (a), detach it in the direction of the arrow.

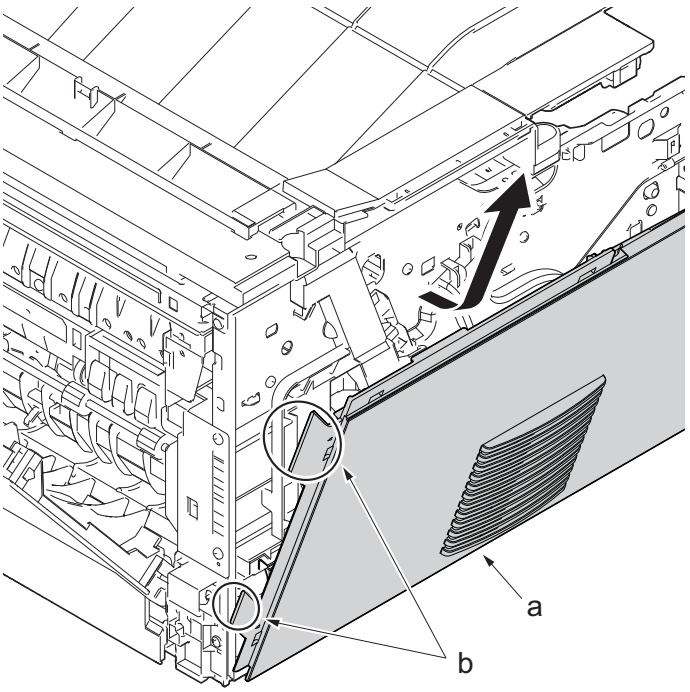

19. Pull out the cassette
20. Open the front cover (a).
21. Twist three hooks (b) at the rear side of the right cover (a) to detach it.
22. Release two hooks by using a flat-head screwdriver (c).

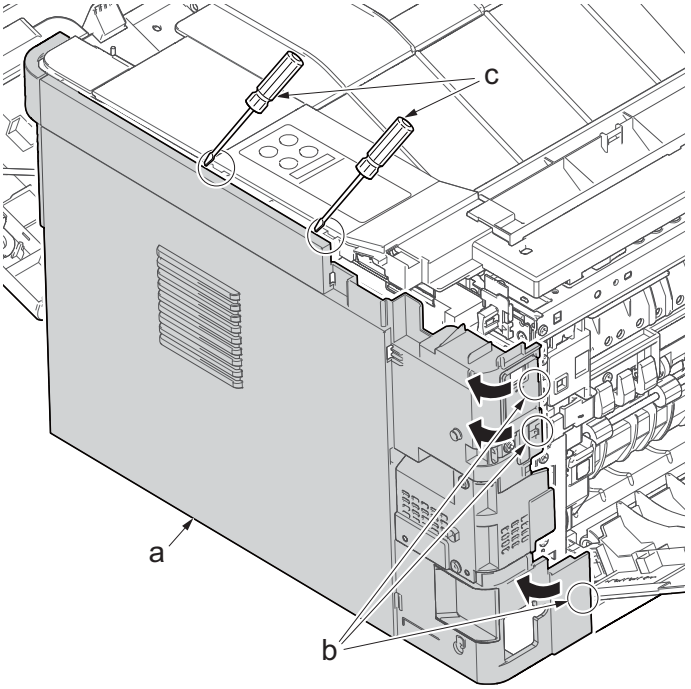

23. Release three hooks by using a flat-head screwdriver (d).
24. Twist two hooks (c) at the front side of the right cover (b) to release them and detach the right cover (b).

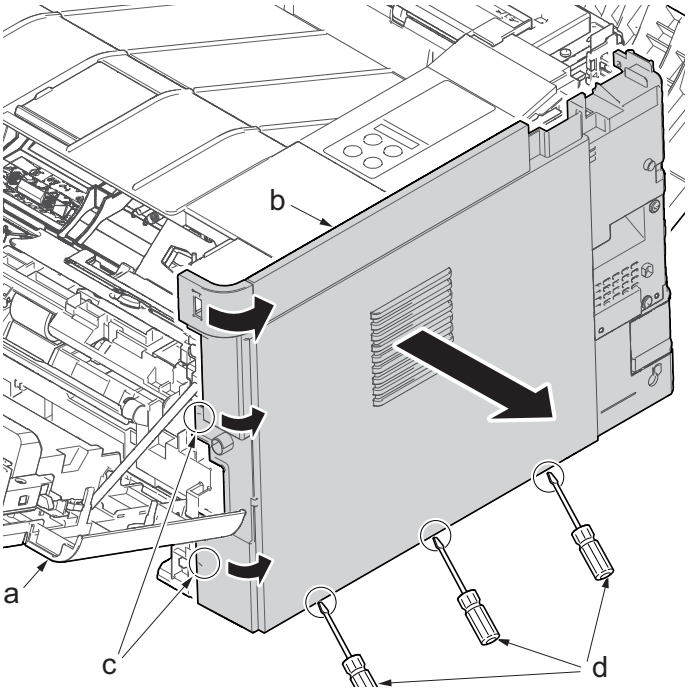

25. Stand the main unit so that you can see the bottom side.
26. Remove four screws(M3x8S tight)(a) and detach the front stay(b).

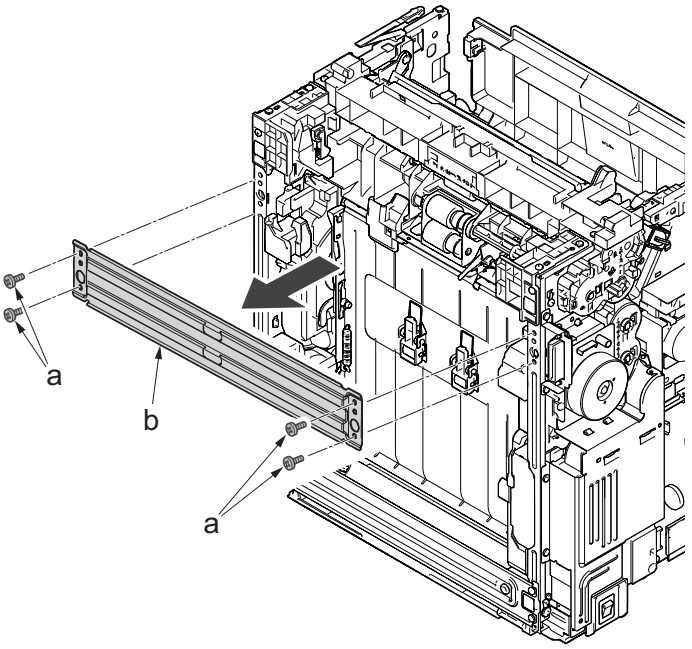

27. Tilt the DU assembly (a) and detach two stoppers(b) while pushing them inside.
28. Lift down the DU assembly(a) to the bottom and pull it toward you to detach it.

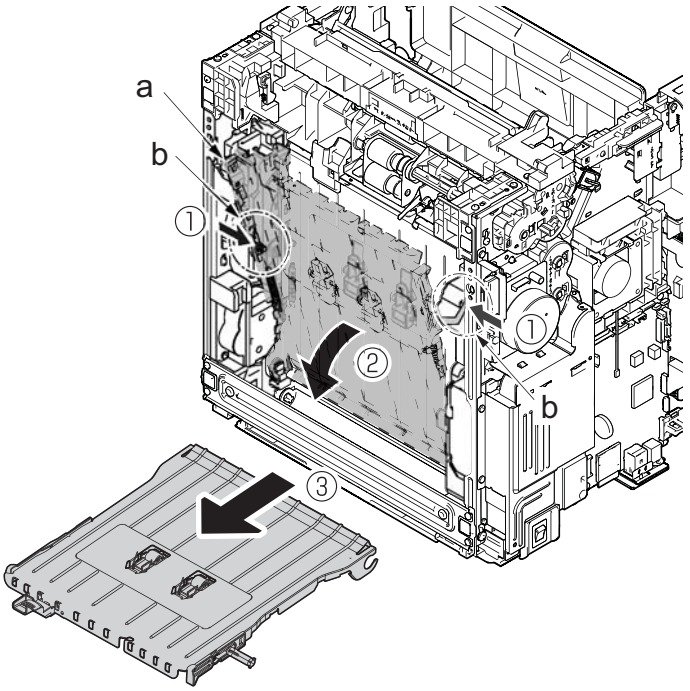

29. Remove three screws(M3×8P tight)(a).
30. Lift up the lower base cover (b) and detach it.
31. Disconnect the connector (c).

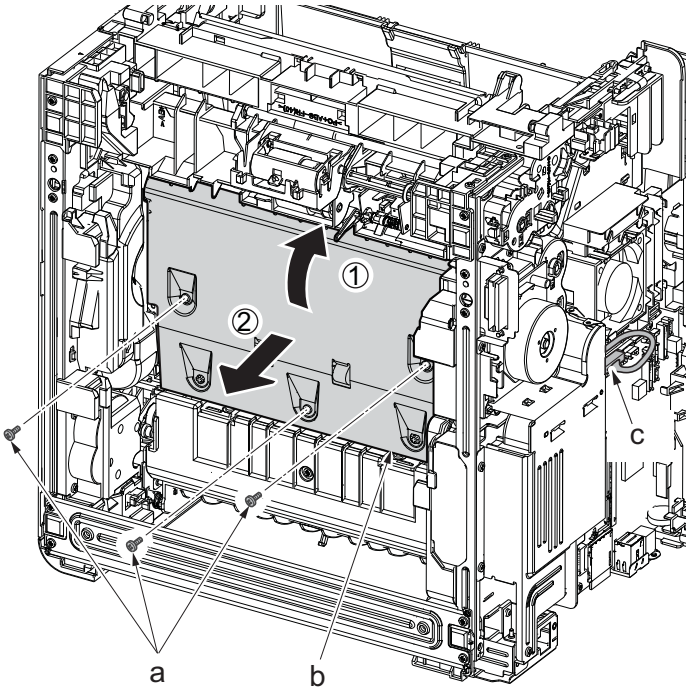

32. Remove the screw(M3×8Ptight)(b) and three screws(M3×8Stight)(c) securing the low voltage power source PWB cover (a) .
33. Remove the low voltage power source PWB cover (a).

Attention: When detaching the low voltage power source PWB, the lower voltage power source PWB protection plate (d) may fall.

34. Disconnect the connector (d) from the main/engine PWB and release the wire from the hook (e).

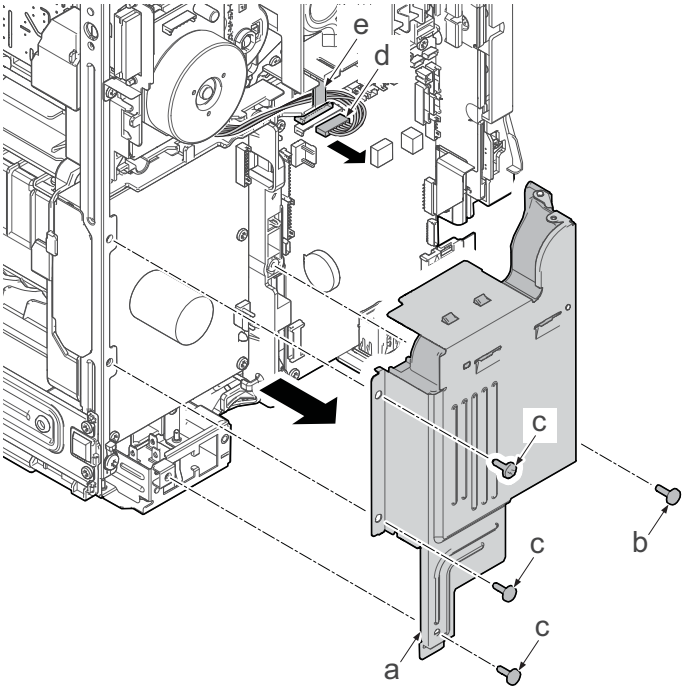

35. Remove the screw(M4x12P?tight)(a), release the board support.
36. Detach the high voltage PWB (b).
37. Check or replace the high voltage PWB (b), and then reattach the parts which are detached in the original position.

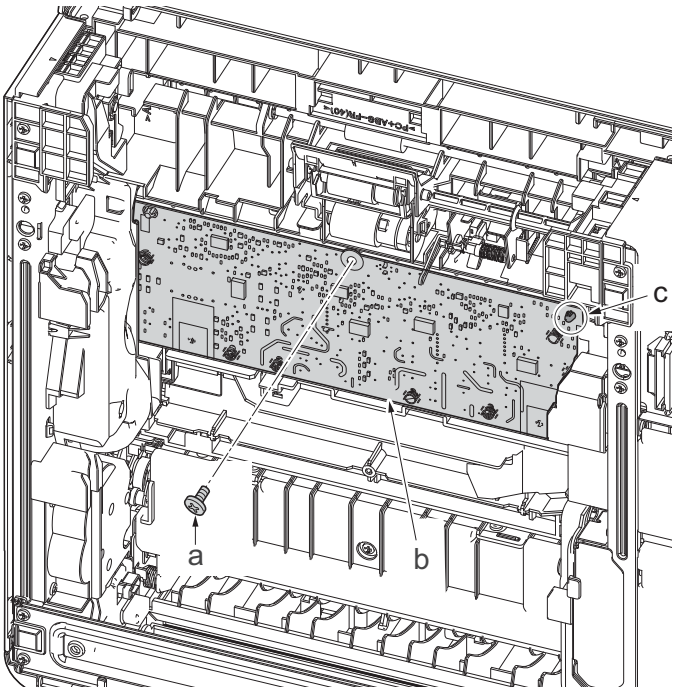

(5-3)Detaching and reattaching the low voltage power source PWB

Procedures

1. Slightly pull out the cassette
2. Open the rear cover (a).
3. Open the cassette cover (c) and release the hook (d) of the left rear cover (b) in the direction of the arrow.
4. Twist the rear left cover (b) to release the hook (e) and detach it.

Attention:
The direction of hook (d) or (e) is reverse. Pay attention to the damage when detaching.

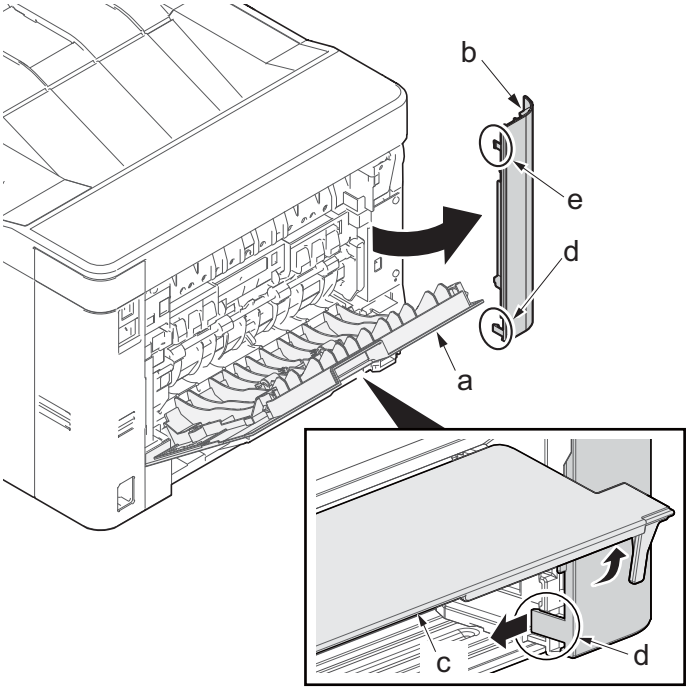

5. Detach the right rear cover (a) while twisting it.
6. Remove the screw(M3×10TP)(b).
7. Release the protrusion (e) by using a flat-blade screwdriver (d).
8. Detach the Wi-Fi cover(c).

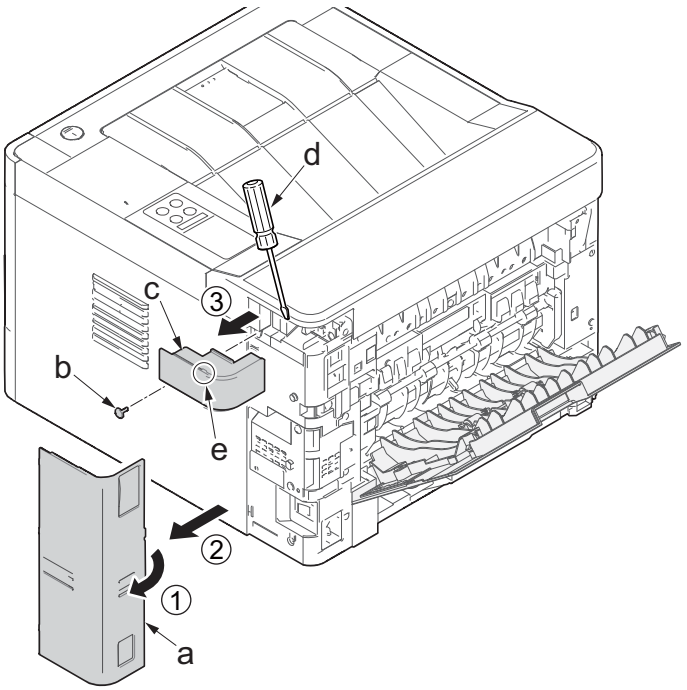

9. Remove two screws(M3×10TP)(a).
10. Release two hooks (b) of the upper rear cover (c) and detach it.

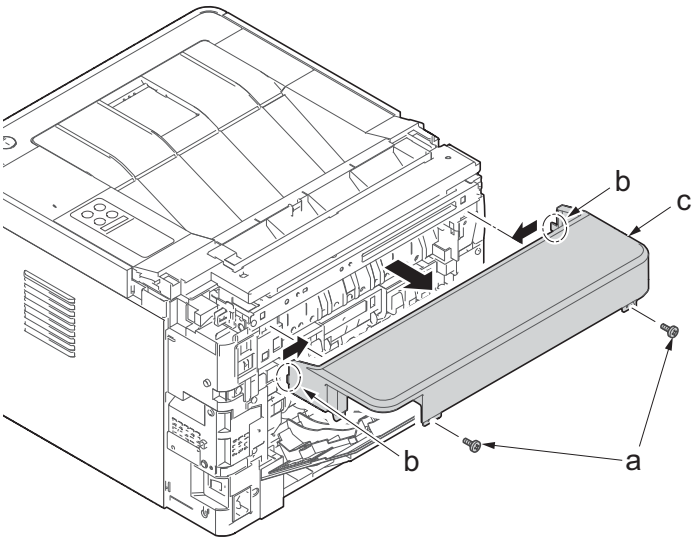

11. Pull out the cassette
12. Open the front cover (a).
13. Twist three hooks (b) at the rear side of the right cover (a) to detach it.
14. Release two hooks by using a flat-head screwdriver (c).

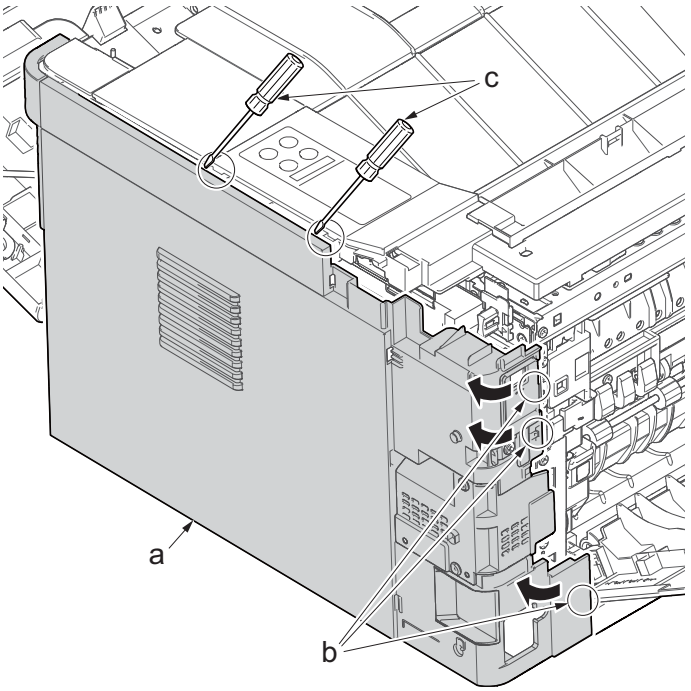

15. Release three hooks by using a flat-head screwdriver (d).
16. Twist two hooks (c) at the front side of the right cover (b) to release them and detach the right cover (b).

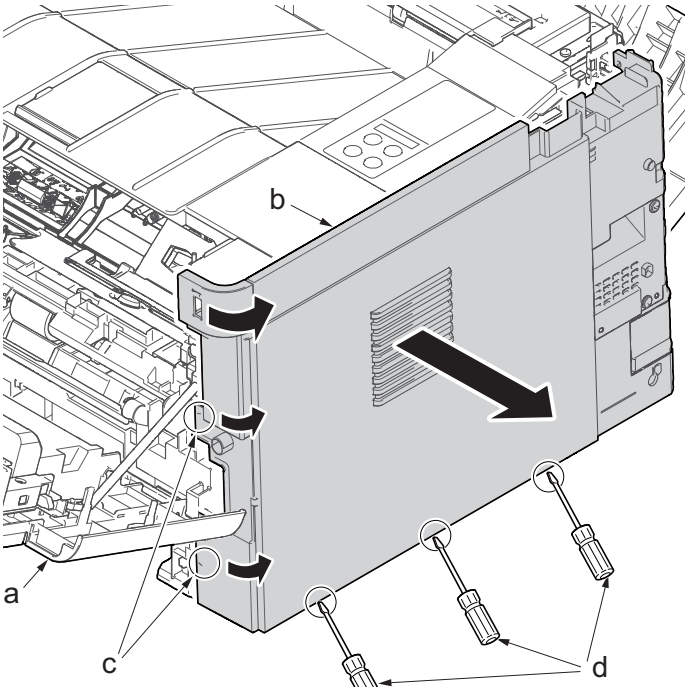

17. Remove the screw(M3×8Ptight) (b) and three screws(M3×8Stight)(c) securing the low voltage power source PWB cover (a) .
18. Remove the low voltage power source PWB cover (a).

Attention: When detaching the low voltage power source PWB, the lower voltage power source PWB protection plate (d) may fall.

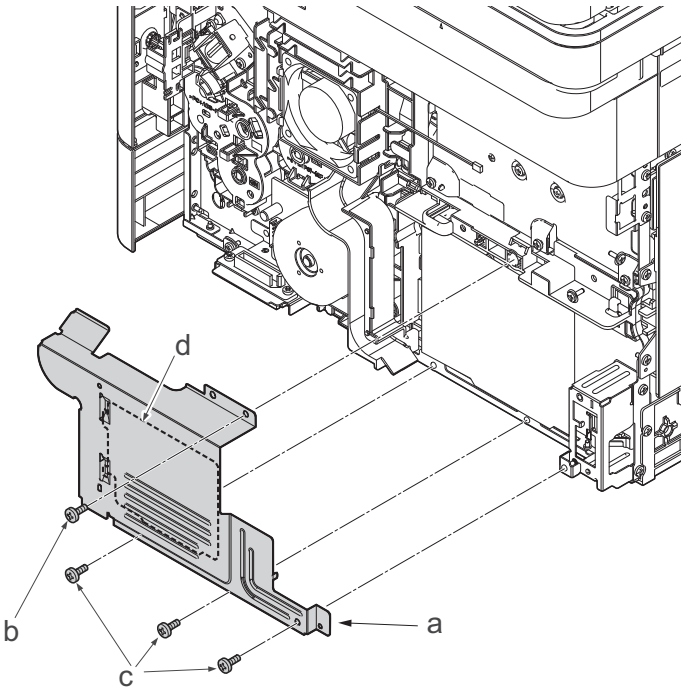

19. Remove three screws(M3x8S tight)(a), detach the inlet mounting plate(b).

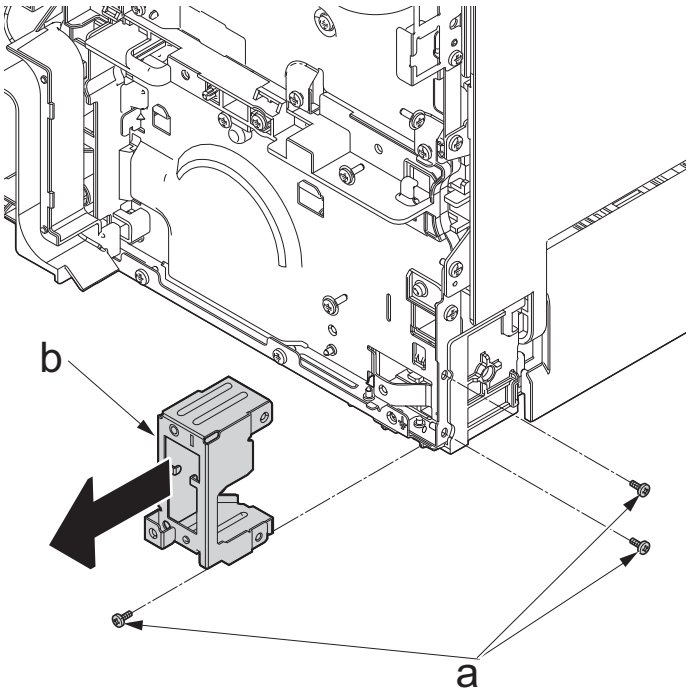

20. Disconnect two connectors (a).
21. Remove the screw(M4×8S tight)(b), remove the ground wire(c).

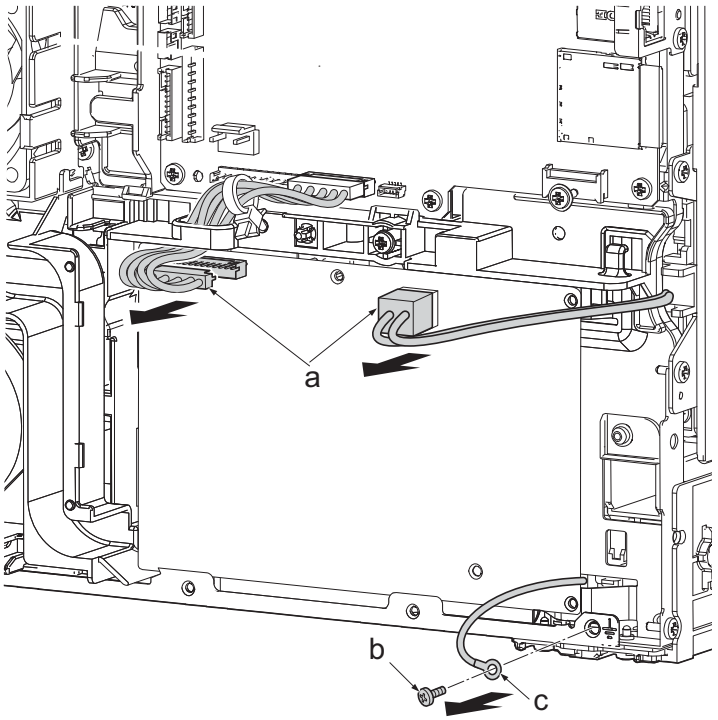

22. Remove three screws(a)(M3x8S tight), detach the low voltage power source PWB (b).
23. Check or replace the low voltage power source PWB (b), and then reattach the parts which are detached in the original position.

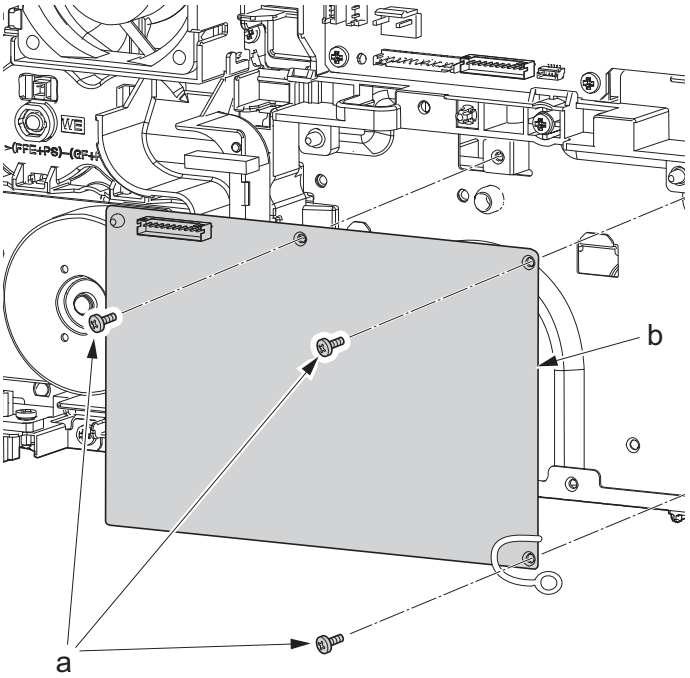

(5-4)Detaching and reattaching the Wi-Fi PWB.

Procedures

24. Detach the right rear cover (a) while twisting it.
25. Remove the screw(M3×10TP)(b).
26. Release the protrusion (e) by using a flat-blade screwdriver (d).
27. Detach the Wi-Fi cover(c).

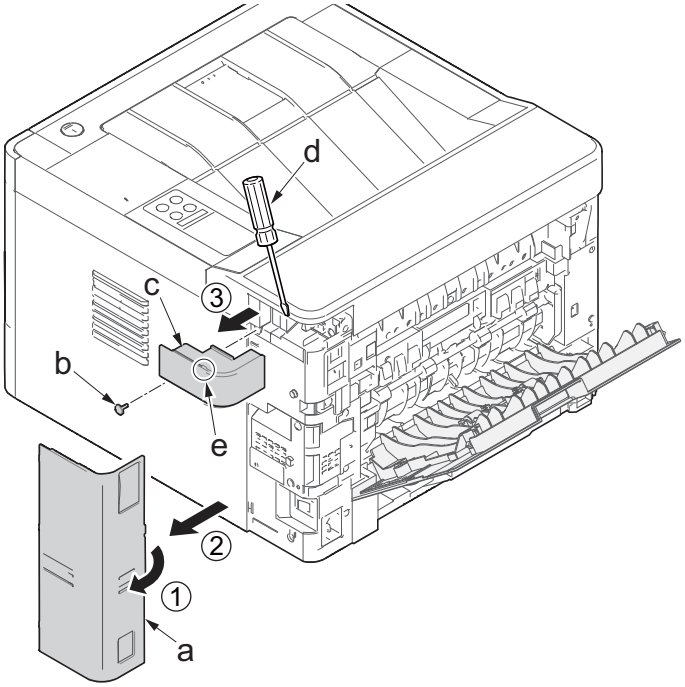

28. Detach the Wi-Fi PWB (a).
29. Check or replace the Wi-Fi PWB (a), and then reattach the parts which are detached in the original position.

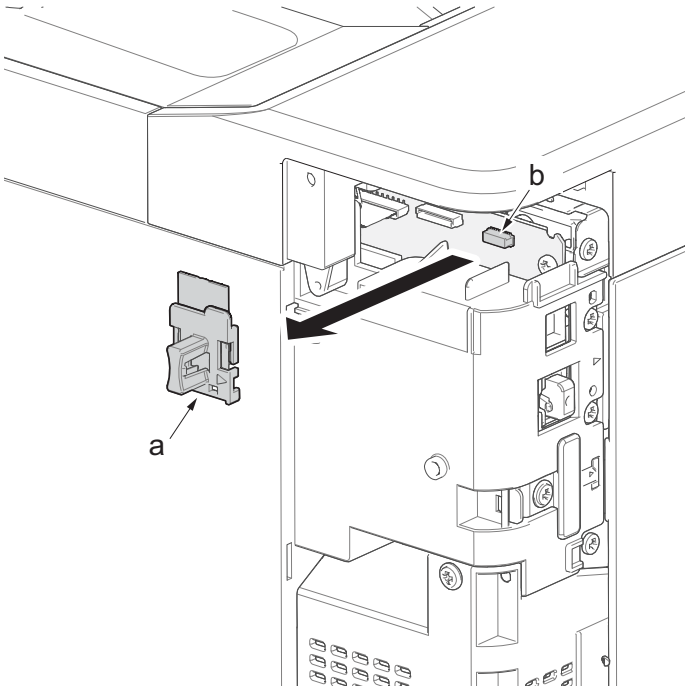

(5-5)Detaching and reattaching the USB PWB.

Procedures

1. Slightly pull out the cassette
2. Open the rear cover (a).
3. Open the cassette cover (c) and release the hook (d) of the left rear cover (b) in the direction of the arrow.
4. Twist the rear left cover (b) to release the hook (e) and detach it.

Attention:
The direction of hook (d) or (e) is reverse. Pay attention to the damage when detaching.

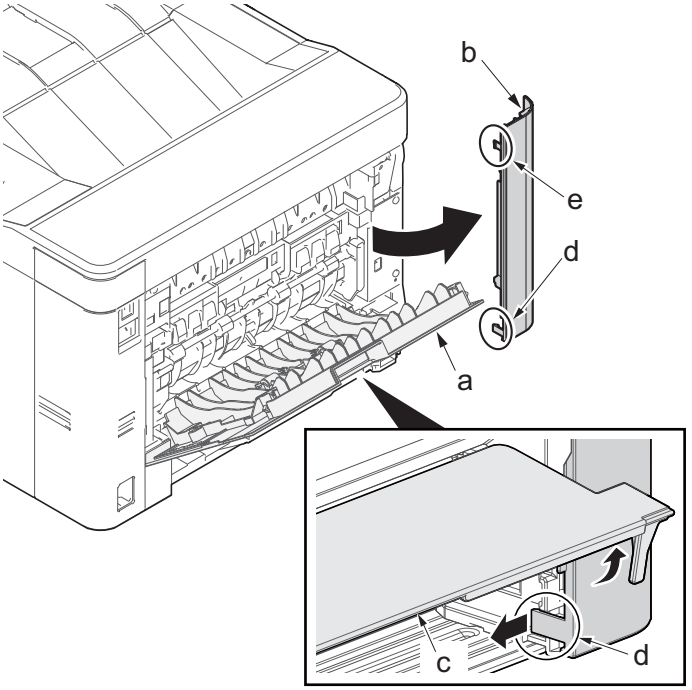

5. Detach the right rear cover (a) while twisting it.
6. Remove the screw(M3×10TP)(b).
7. Release the protrusion (e) by using a flat-blade screwdriver (d).
8. Detach the Wi-Fi cover(c).

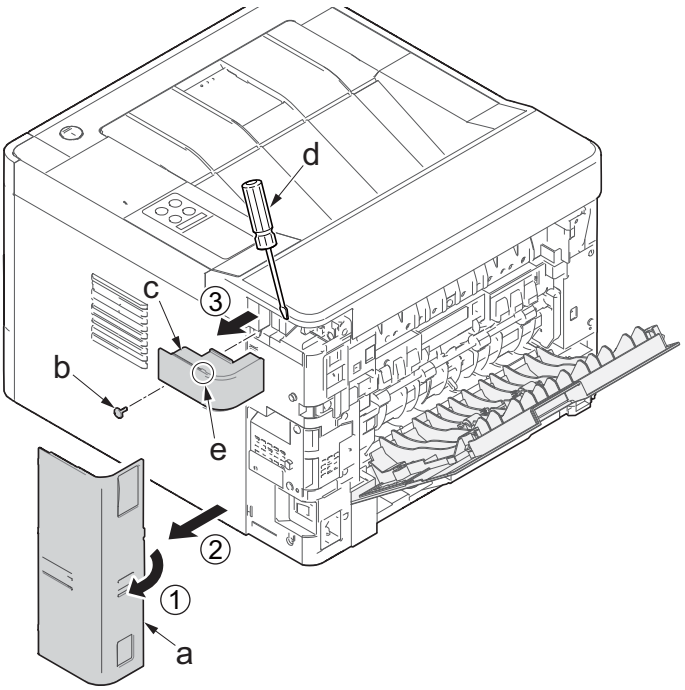

9. Remove two screws(M3×10TP)(a).
10. Release two hooks (b) of the upper rear cover (c) and detach it.

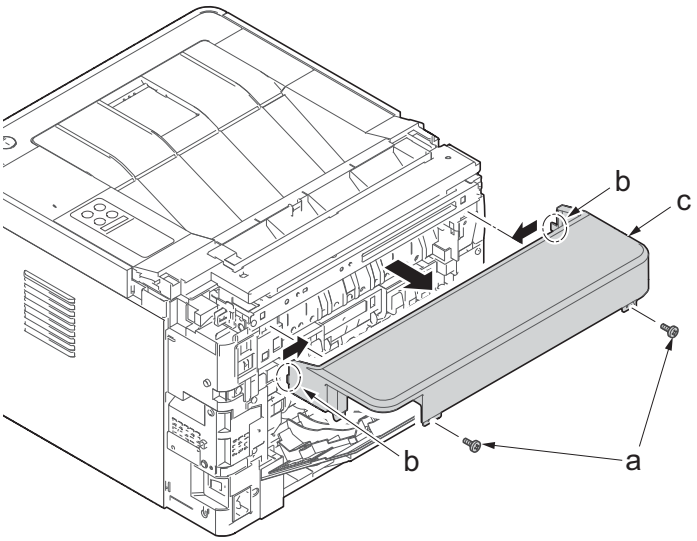

11. Pull out the cassette
12. Open the front cover (a).
13. Release four hooks (b) at the front side of the left cover(a).

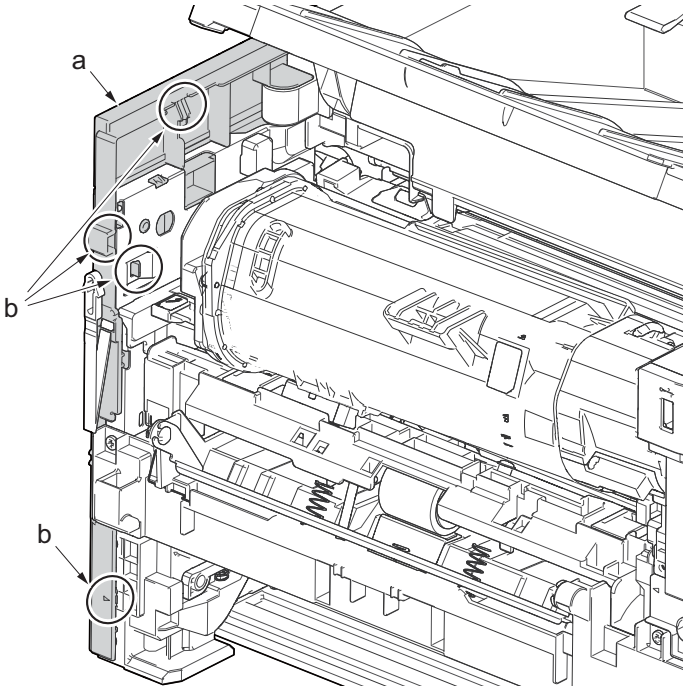

14. Release two hooks (b) at the rear side of the left cover (a).
15. While tilting the left cover (a), detach it in the direction of the arrow.

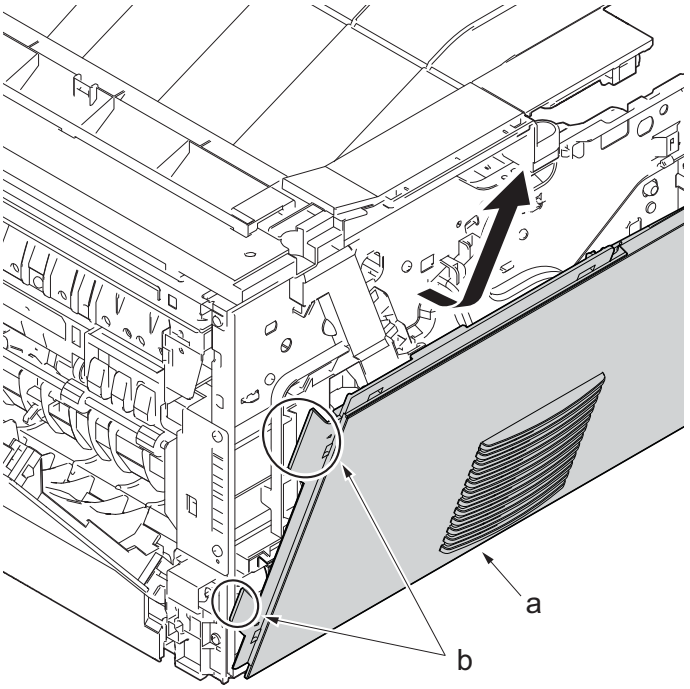

16. Twist three hooks (b) at the rear side of the right cover (a) to detach it.
17. Release two hooks by using a flat-head screwdriver (c).

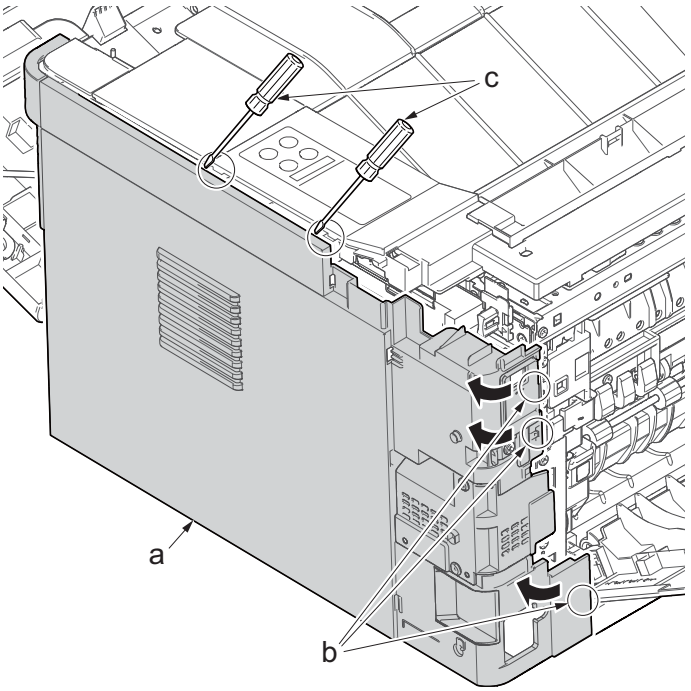

18. Release three hooks by using a flat-head screwdriver (d).
19. Twist two hooks (c) at the front side of the right cover (b) to release them and detach the right cover (b).

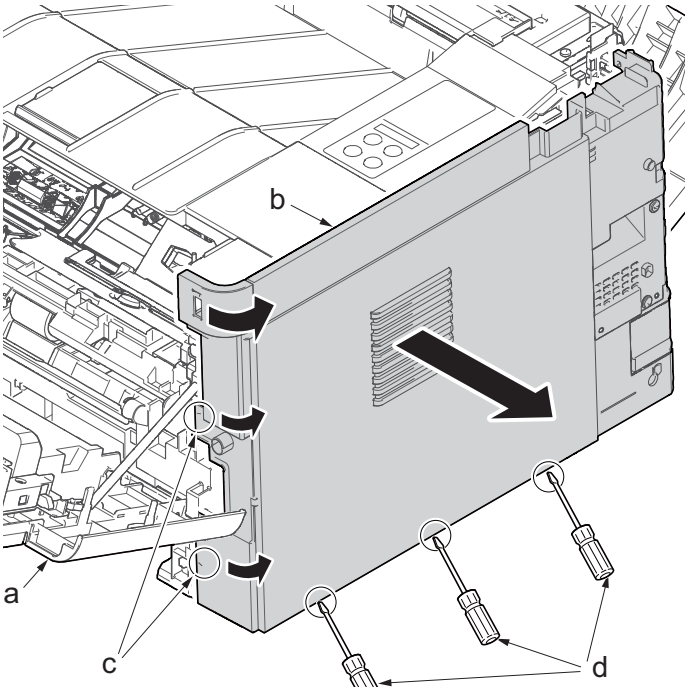

20. Open the top cover (a).
21. Remove the screws(M3x8S tight)(b), detach the right middle cover (c).

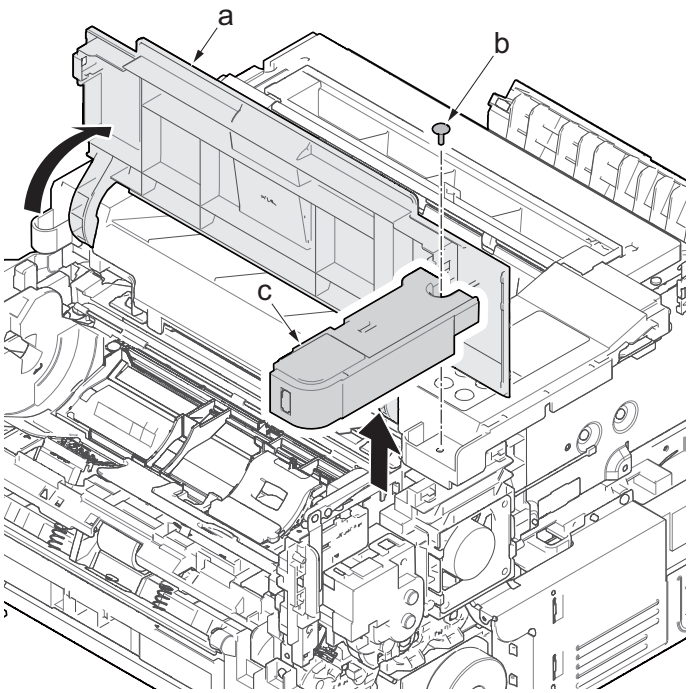

22. Remove two screws (a) (M3×8 tight).
23. Detach the USB PWB (b).
24. Check or replace the USB PWB (b), and then reattach the parts which are detached in the original position.

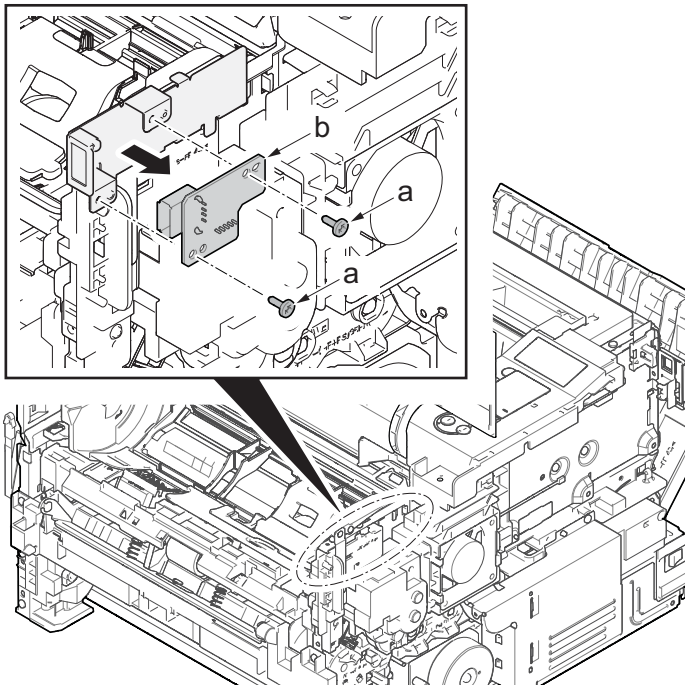

4-5Maintenance parts replacement procedures (option)

(1) Paper feeder

(1-1)Detaching and reattaching the PF main PWB

Procedures

1. Remove two screws(M3×8P tight)(a).
2. Release two hooks (b) of the upper cover (c) and detach it.

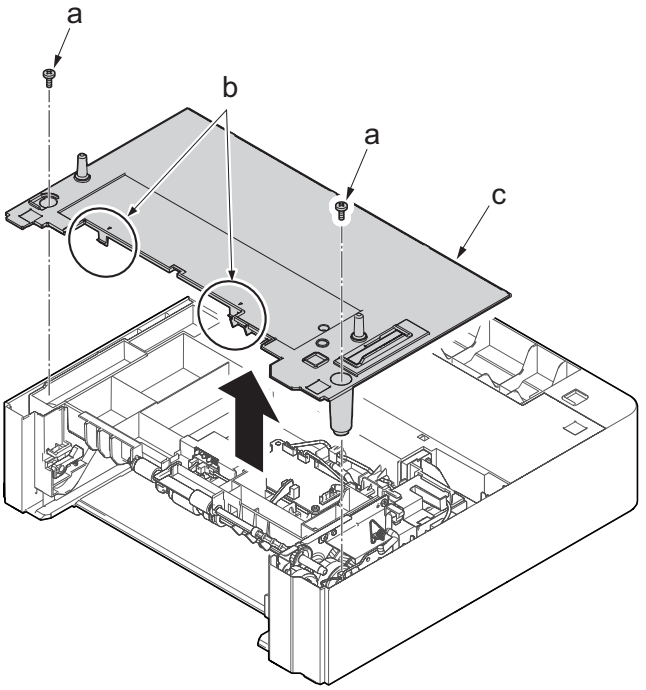

3. Disconnect all the connectors (a) from the PF main PWB(c).
4. Remove three screws(M3×8P tight)(b).
5. Detach the PF main PWB (c).
6. Check the status of the PF main PWB (c), clean or replace it as needed.
7. Reattach the parts in the original position.

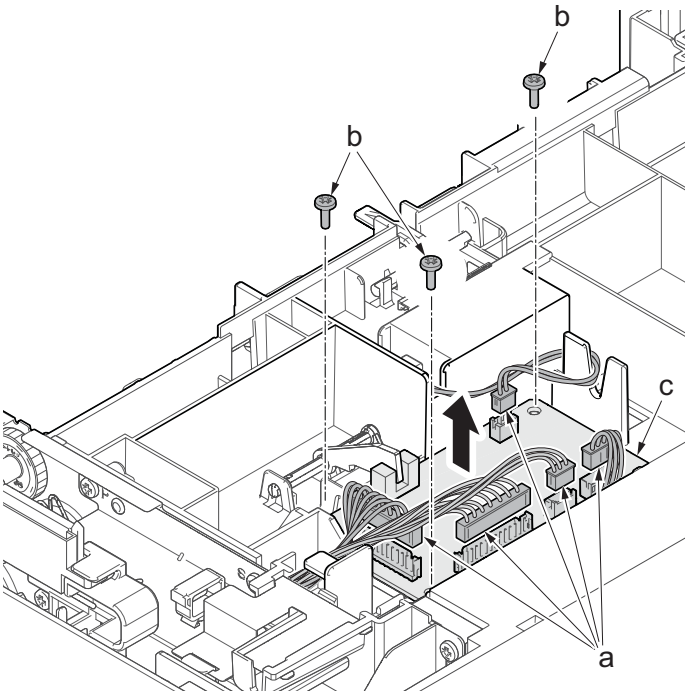

(1-2)Detaching and reattaching PF conveying motor.

Procedures

1. Remove two screws(M3×8P tight)(a).
2. Release two hooks (b) of the upper cover (c) and detach it.

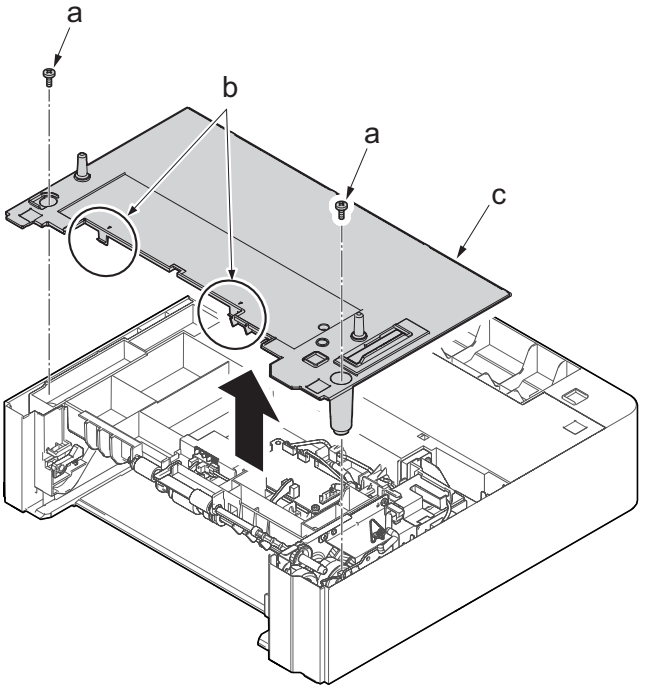

3. Remove the screw(M3x8P tight)(a) and detach the frame assembly (b).

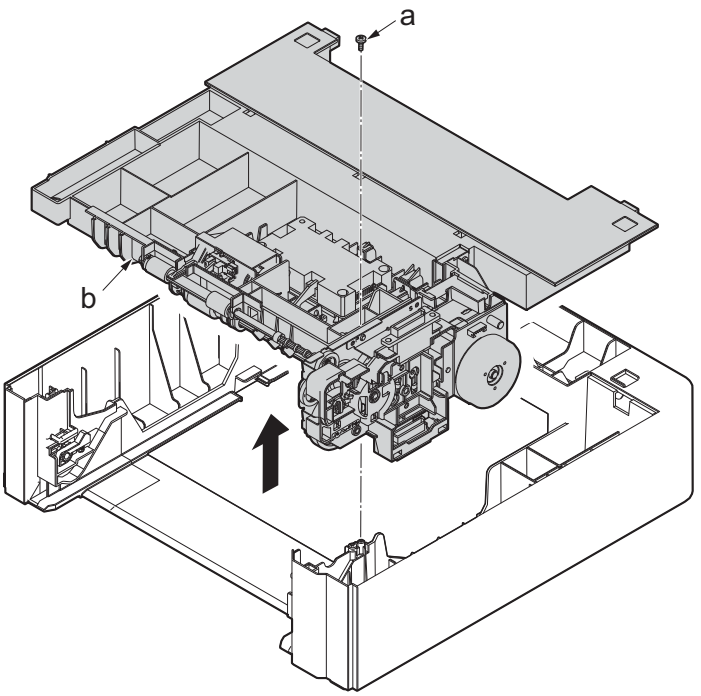

4. Disconnect three connectors (b) from the PF main PWB (a).
5. Remove the sheet(c) and open the wire saddle(d).
6. Remove the fixed screws(M3x8TP)(e) of the earth spring(f).

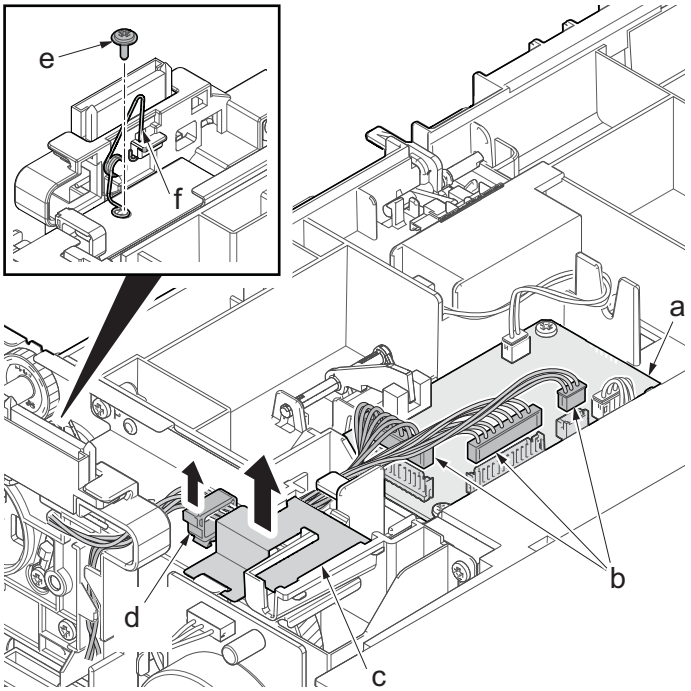

7. Disconnect two clutch connectors (a) and the motor connector (b).
8. Remove six screws(M3x8S tight)(a) and two ground terminals(d).
9. Detach the drawer support part (d).

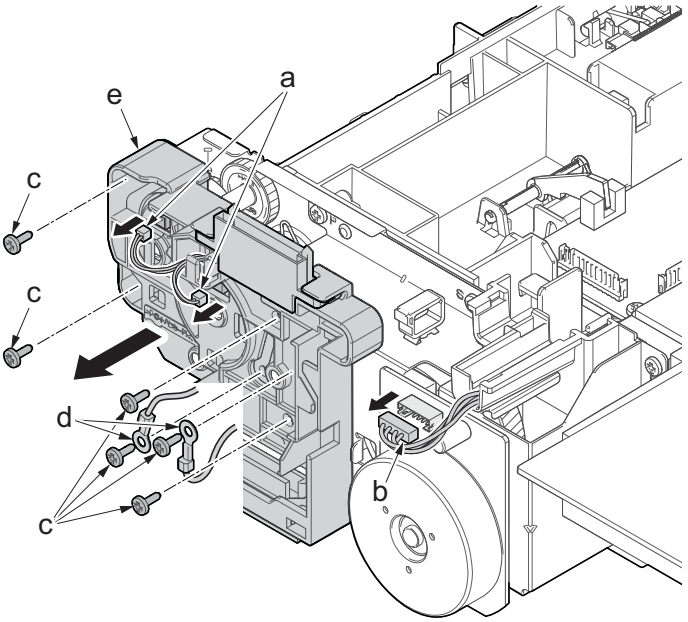

10. Remove two screws (M3x8S tight)(a).
11. Remove three screws (M3x8P tight)(b).
12. Detach the PF conveying motor assembly (c).

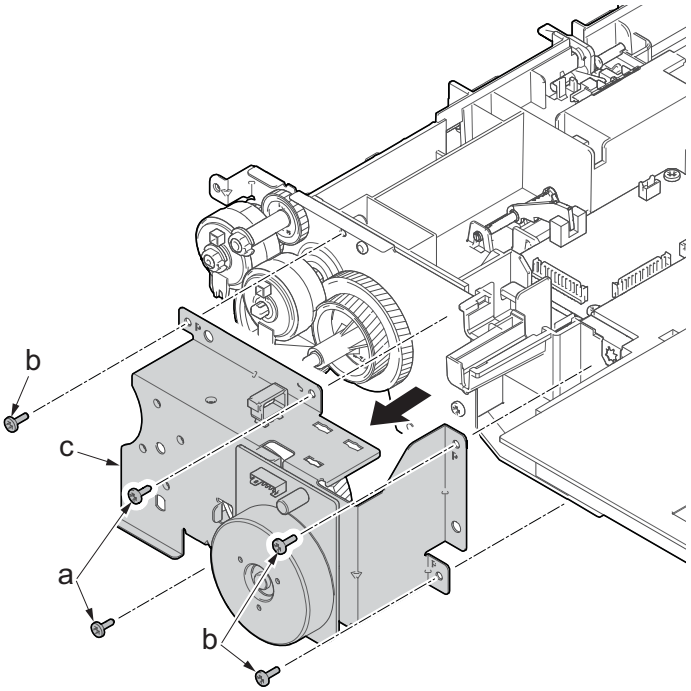

13. Detach the gear (a).
14. Remove three screws (b) (M3x4).
15. Detach the PF conveying motor (c) from the motor mounting plate (d).
16. Check the status of the PF conveying motor, clean or replace it if necessary.
17. Reattach the parts in the original position.

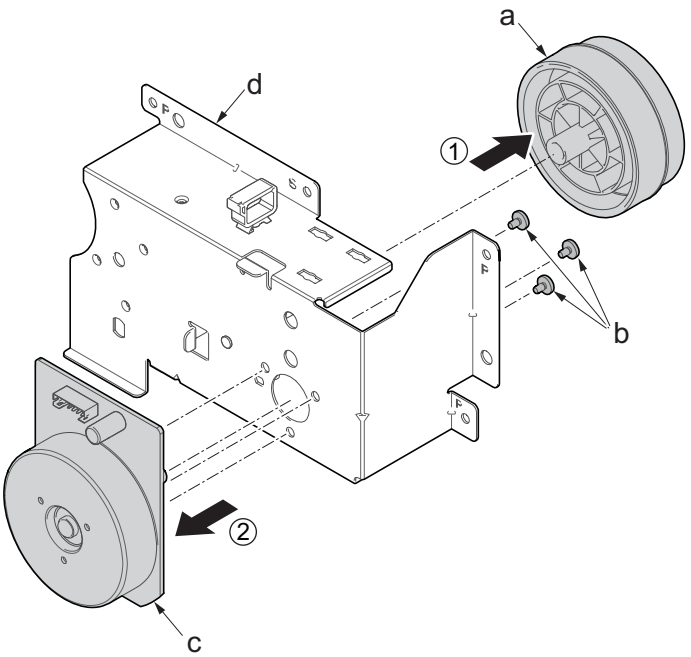

(1-3)Detaching and reattaching the PF clutch.

Procedures

1. Remove two screws(M3×8P tight)(a).
2. Release two hooks (b) of the upper cover (c) and detach it.

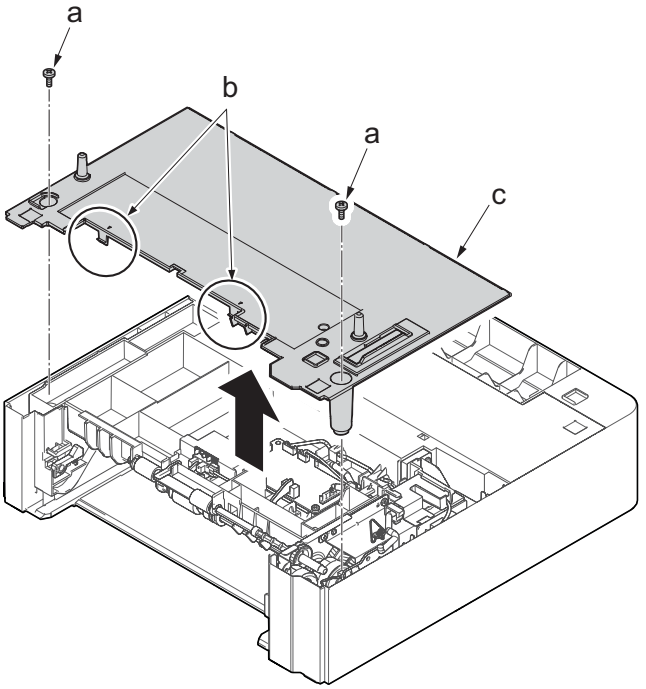

3. Remove the screw(M3x8P tight)(a) and detach the frame assembly (b).

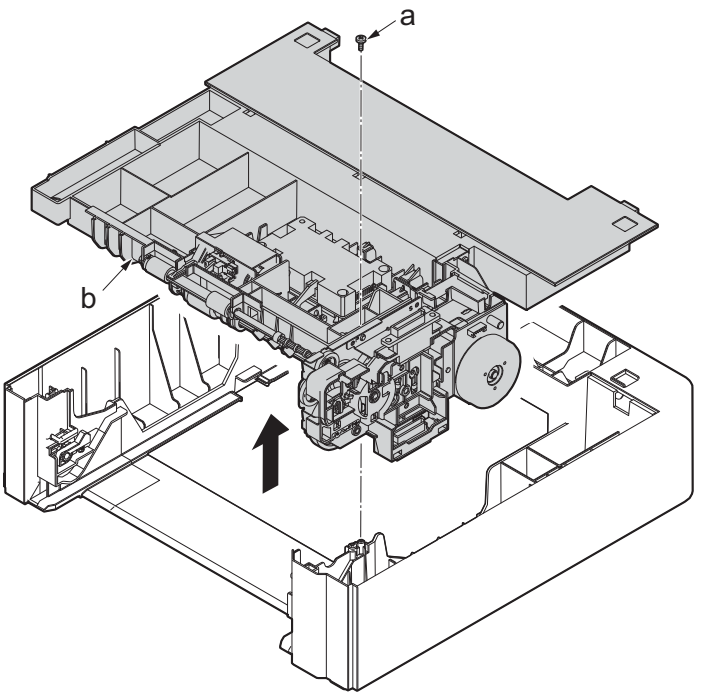

4. Disconnect three connectors (b) from the PF main PWB (a).
5. Remove the sheet(c) and open the wire saddle(d).
6. Remove the fixed screws(M3x8TP)(e) of the earth spring(f).

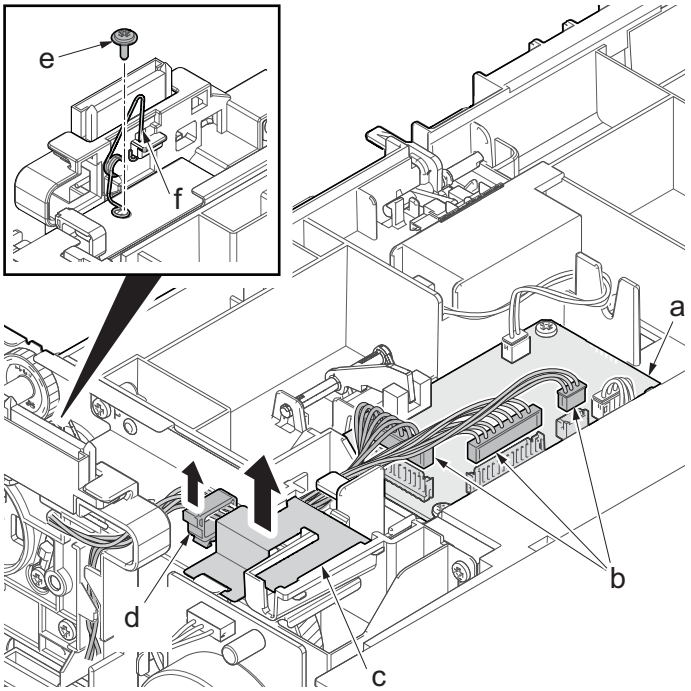

7. Disconnect two clutch connectors (a).
8. Remove six screws(M3x8S tight)(b) and two ground terminals(c).
9. Detach the drawer support part (d).

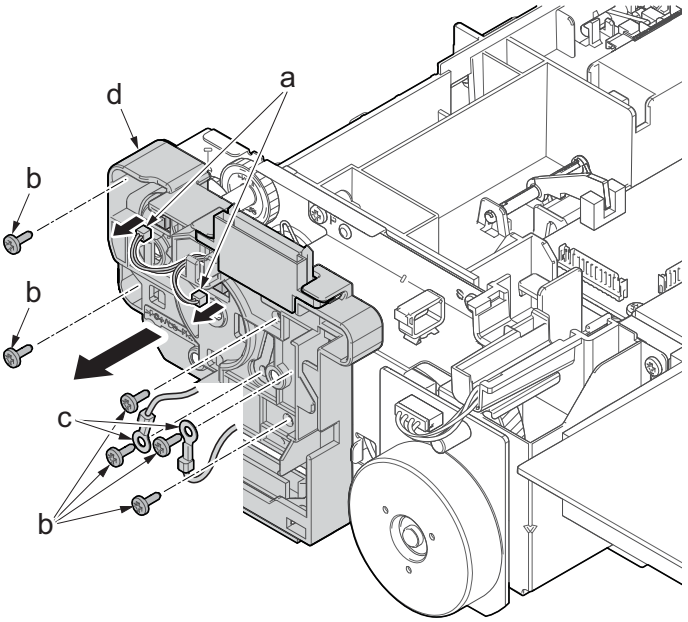

10. Detach the PF paper feed clutch(a).
11. Detach the PF feed clutch(b).
12. Check the status of the clutch, clean or replace it if necessary.
13. Reattach the parts in the original position.

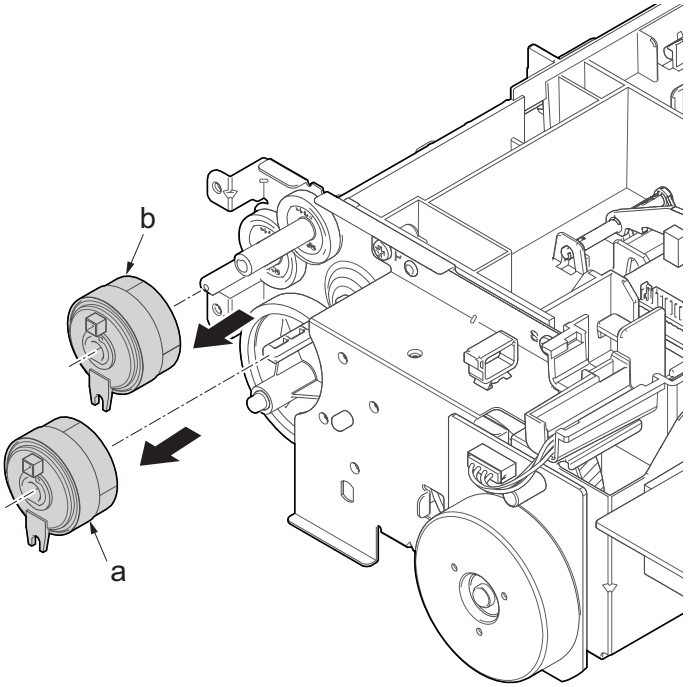

5 Firmware

5-1 Firmware update

Execute the following to update the firmware below.
*: The processing time is reduced with simultaneous processing by group.

[GROUP1 UPDATE]

Update order	Target	Master file name	Message
1	Controller firmware	DL_CTRL.2RV	CTRL
2	Optional language data 1(for controller)	DL_OPT_xx.2RV*1	OPT1
3	Optional language data 2(for controller)	DL_OPT_xx.2RV*1	OPT2
4	Optional language data 3(for controller)	DL_OPT_xx.2RV*1	OPT3
5	Optional language data 4(for controller)	DL_OPT_xx.2RV*1	OPT4
6	Optional language data 5(for controller)	DL_OPT_xx.2RV*1	OPT5

*1: 01 to 99 of a different number for each language is inserted in "xx".

[GROUP2 UPDATE]: No applicable firmware is available.

[GROUP3 UPDATE]

Update order	Target	Master file name	Message
1	Engine firmware	DL_ENGN.2VB	ENGN

[GROUP4 UPDATE]: No applicable firmware is available.

[GROUP5 UPDATE]: No applicable firmware is available.

Verify the signature at firmware update

Verify the signature of the update file to prevent the firmware update with illegally falsified data.

File names of the signature and firmware certificate

Target	Signature file name	Firmware certificate file name
Controller data	2RV_CTRL_sign.bin	2RV_CTRL_cert.pem
Optional language data	2RV_OPT_xx_sign.bin*1	2RV_OPT_xx_cert.pem*1
Engine PWB	2RV_ENGN_sign.bin	2RV_ENGN_cert.pem
Data for optional language deletion	2RV_OPT_ER_sign.bin	2RV_OPT_ER_cert_pem

*1: 01 to 99 of a different number for each language is inserted in "xx".

Preparations

Unzip the file containing the downloaded firmware and then copy the firmware and high-speed master file (skip files: ES_SKIP.ON) in the root folder of the USB memory.

*: If the high-speed master file exists, the same version firmware update is skipped.

Procedures

1. After turning the power switch (a) on and checking the [Processing] indicator is lit, turn the power switch (a) off.
2. Insert the USB memory (b) with the firmware into the USB memory slot.
3. Turn the power switch (a) on.

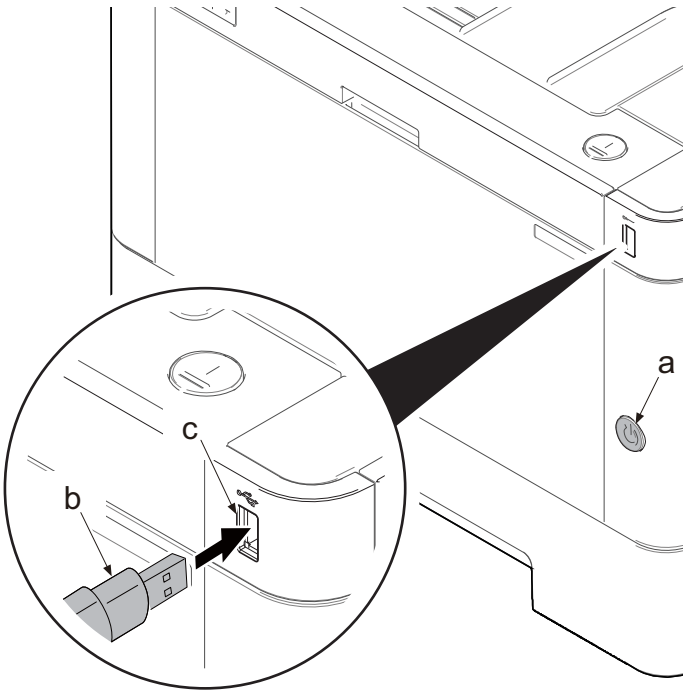

4. When the firmware update is started, all green LEDs on the operation panel blink during the process.

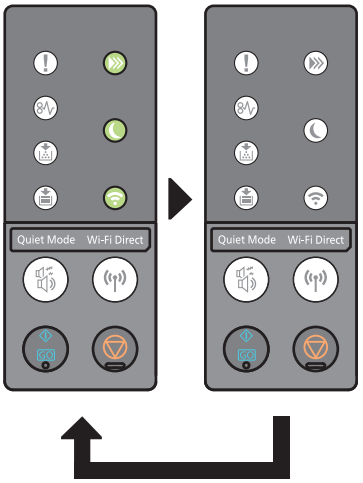

5. When the firmware update is completed, it is indicated with the following LED pattern.

In case of the normal completion.
When the firmware update is completed normally, all green LEDs turn on.
At this time also when all targets are no change, all the green LEDs turn on.

In case of the error completion.
In case of occurring an error during the firmware update, the process is interrupted immediately and all red LEDs blinks. The target items are not updated since an error occurred.

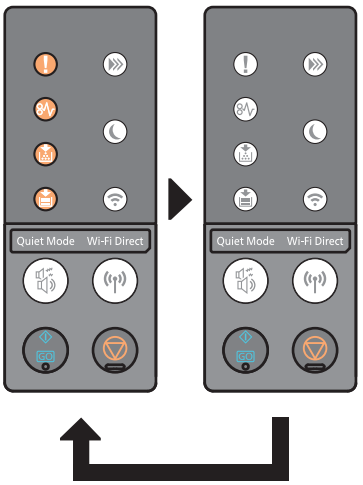

Error code

Code	Error contents	Code	Error contents
0000	Others	S000	Other signature verification error
0100	There is no master file.	S001	The signature verification file is insufficient.
0200	Master file version discrepancy	N001	Unable to connect the network *2 (There is no target to update.)
03xx *4	There is no download file (No.xx).		
04xx *4	File (No.xx) check sum discrepancy	N002	Can not connect to the internet *3 (There is the target to update.)
05xx *4	File (No.xx) preparation failure		
06xx *4	File (No.xx) size excess		
08xx *4	File (No.xx) writing failure		

*1: The expiration of the FM certification is also included.
*2: As the normal startup is possible next time, restart automatically and start normally.
*3: Since the normal start-up is not available next time, it is not restarted automatically but moved to the USB update mode.
*4: The identifier applicable to the code XX is as follows.

Update target	Code	Identifier
Controller data	01	BOOT
	02	KERNEL
	03	FDTBIN
	04	ROOTFS
	05	APPLI
Optional language data	01	M_OPT_ALL
Engine PWB	01	ENGN

Each master file code is "00".

The signature verification result display

Official signature verification file	Indicate the result
Both certificate and signature files exist and verification is successful.	Version number
Both certificate and signature files exist but verification is unsuccessful.	S000
Neither certificate nor signature files exist. Or either of them does not exist.	S001

6. Unplug the power cord and disconnect the USB memory.
7. Plug in the power cord and turn the power switch (a) on.
8. Check "Processing" is displayed and then turn the power switch (a) off.

Precautions

Never turn the power switch (a) off or disconnect the USB memory (b) during the firmware update.

Safe-Update

When the firmware update was interrupted by power shut-off or disconnecting the USB memory during the firmware update, the firmware update is retried at the next power-on.
Turn the main power on again while the USB memory is installed.
*: The firmware update that was already completed before power shut-down is skipped.

6 Service modes
6-1 Service mode

(1) Maintenance menu

If using [Maintenance menu] installed from the Product Library DVD, it is possible to adjust the print position and to enhance the print quality to the maximum.

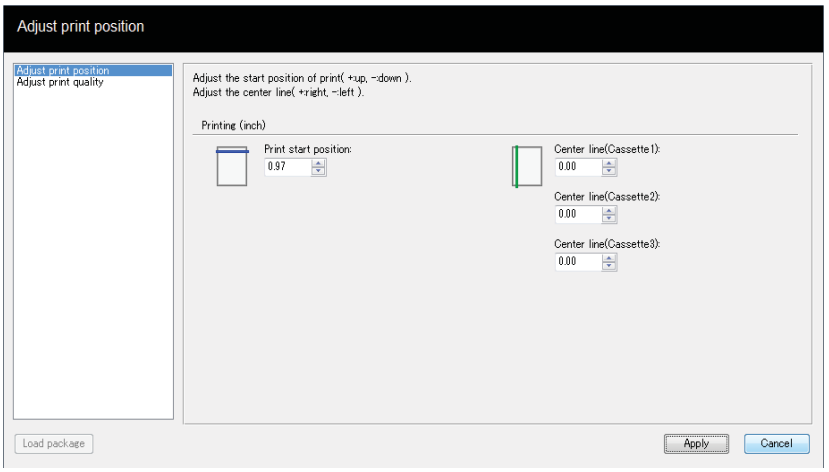

Items		Explanation
Adjust the print position	Print the start position	Designate the top margin value to adjust the print starting position. Setting value: 0 to 300 mm (in 5 mm increments)
	Center line	Designate the left margin value for each available paper source to adjust the center position. This setting can used in each cassette when an usable optional paper feeder is installed. Setting value: -25 to 25 mm (in 5 mm increments)
Adjust the print quality	Set the drum potential	If the print quality deteriorates, it is possible to improve it by adjusting the drum potential. Setting value: 1 to 7
	Altitude Adj.	When the print quality deteriorates at the high altitude of 1,000m or more, it is possible to improve the print quality by executing the altitude adjustment. Setting value: Normal, 1,001 to 2,000m, 2,001 to 3,000m, 3,001 to 3,500m
	Drum Refreshing	When vertical streaks appear on the image, execute the drum refreshing.

(2) Printing the report

When printing each report in order to check the machine setting and status, execute the following operation.

Print Status Page

The information which current setting contents, memory size and installed optional device can be checked.
Press and hold the [Go] key 3 seconds or more or 9 seconds or more to print the status page.
If it is possible to print the report, the indicator blinks as follows.

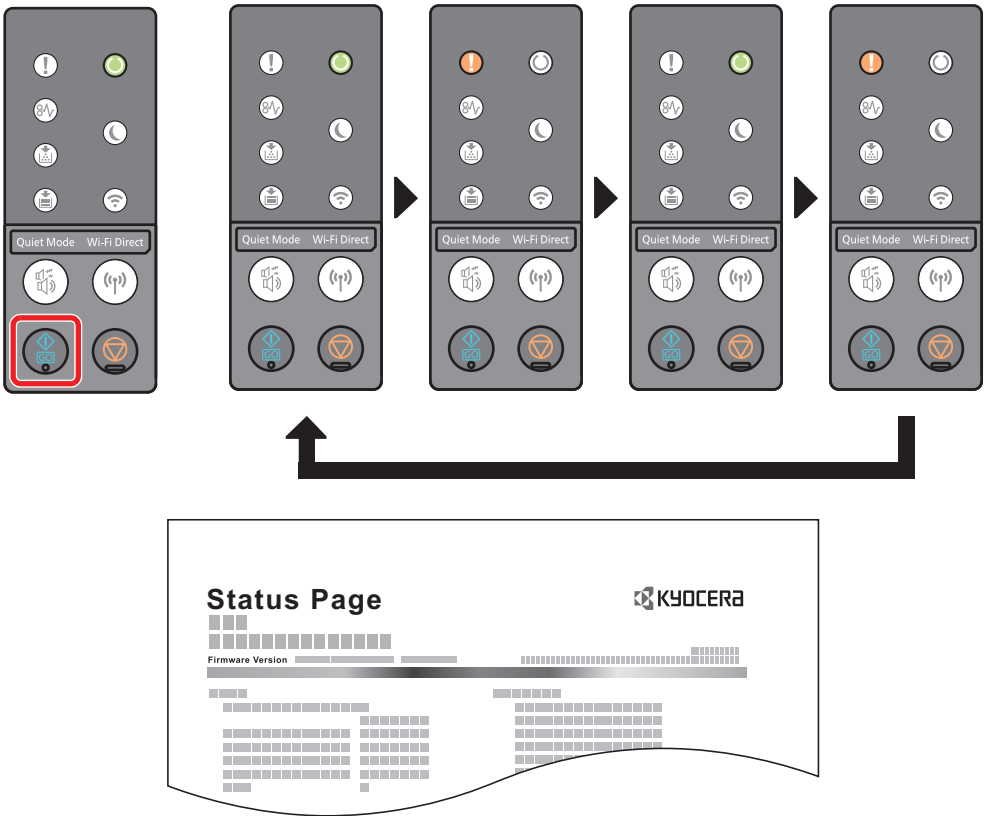

Print service status page

More detailed information than the status page can be checked.
It is the main purpose that the service person prints it in the case of the maintenance.
Press and hold the [Go] key 10 seconds or more to print the status page.
If it is possible to print the report, the indicator blinks as well as in the case of the status page.

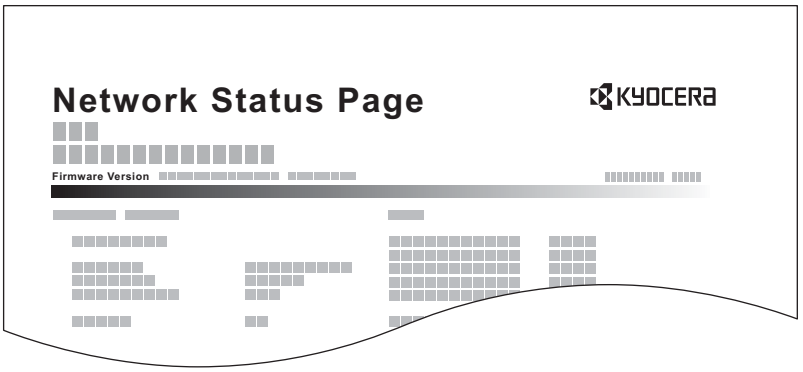

NOTE

In the case of the machine with the network function, the service status page and the network status page are printed.
The network status page provides the information such as network interface firmware version, network address and network protocol.

(3) Toner install mode

Contents

When replacing with the new developer unit, it needs to supply toner as it is not included in the developer unit. Though the toner is supplied automatically to the developer unit without the specific operation, it takes a long time to supply the toner inside the developer unit to the level so that it is possible to print in the case of the new developer unit which does not contain the toner at all. (About 200gram toner needs to reside.) In case of replacing the developer unit, it is possible to supply toner temporally at a high speed in this mode.

Purpose

Enforce to supply the toner when replacing the developer unit.

Method

1.Open the front cover.
2.Press and hold the [Go] and [Stop] keys simultaneously 5 seconds or more.
3.Close the front cover. The toner installation mode is executed.
* :When the toner installation mode is executed. it stops the toner supply.

(4) Checking/clearing the maintenance cycle

Contents

After replacing the maintenance kit, execute this item and reset the counter in order to newly start the count.

Purpose

Clears maintenance kit life counts.

Replacement procedures

Drum unit (See page 4-14)
Developer unit (See page 4-13)

Method

1.Open the front cover.
2.Press and hold the [Go] key 15 seconds or more.
3.Close the front cover. The maintenance counter is cleared.

6-2 Print event log

Print event log

Contents

List of the history of paper jams, self-diagnostics errors and toner container replacement is printed.

Purpose

The machine failure is analyzed by judging the occurrence history of each item.

Method

1.Connects between the main unit and PC (network) via the USB interface connector or network interface connector.
2.Connects the power cord.
3.Turn the power switch on. Check if it comes to the ready-to-print status.
4.Sends the following Prescribe command from PC to the main unit.

```
!R!KCFG"ELOG";EXIT;
```

5.Prints the event log.

Completion

Press the [Stop] key.

Remarks: explaining the set contents (detail of the above procedure 4.).

In the case of connection via the USB interface connector

(1)Save the file describing the Prescribe commands at the above 5.
(2)Sets the shared printer at the sharing tab of the printer properties.
(3)Select the port to connect via USB at [Port] tab.
(Set shared printer name.)
(4)Start up DOS and execute the following command.
copy file name\\computer name\shared printer name
*: Designate the file name saved at (1)

In the case of connection via the network interface connector (using the FTP communication).

(1)Save the file describing the Prescribe commands at the above 4.
(2)Start up DOS and execute the following command.
IP address of ftp printer
*: Both user name and password are left black to proceed.
(3)Next, execute the following command.
put file name
*: Designate the file name saved at (1)

Detail of event log (1)

Event Log

KYOCERA

Printer
ECOSYS P2040dw

XXXXXXXXXXXXXXXX
(2) 2014/10/19 15:15

(1) Firmware version 2RY_2000.000.000 2014.09.19

[XXXXXXXX] (3) [XXXXXXXX] (4) [XXXXXXXX] (5)

(6) Machine No.:Z7T0000000 (7) Life Count:100000

(8) **Paper Jam Log**

#	Count.	Event Descriptions	Date and Time
16	9999999	4003.01.00.00.00	2014/09/22 10:00
15	8888888	0501.01.00.00.00	2014/09/20 09:22
14	9999999	4201.01.00.00.00	2014/09/11 10:00
13	9999999	4003.01.00.00.00	2014/09/11 10:00
12	9999999	4003.01.00.00.00	2014/09/11 10:00
11	9999999	4003.01.00.00.00	2014/09/03 10:00
10	9999999	4003.01.00.00.00	2014/08/15 10:00
9			8/11 10:00
8			7/05 10:00
7			7/04 10:00
6	9999999	4003.00.00.00.00	2014/06/26 10:00
5	9999999	4003.00.00.00.00	2014/05/01 10:00
4	9999999	4003.00.00.00.00	2014/04/05 10:00
3	9999999	4003.00.00.00.00	2014/02/21 10:00
2	9999999	4003.00.00.00.00	2013/11/3010:00
1	9999999	4003.00.00.00.00	2013/11/24 10:00

4003.01.00.00.00
(a) (b) (c) (d) (e)

(10) **Maintenance Log**

#	Count.	Item	Date and Time
8	9999999	02.01	2014/07/05 10:00
7	9999999	02.00	2014/07/04 10:00
6	9999999	02.01	2014/06/26 10:00
5	9999999	02.02	2014/05/01 10:00
4	9999999	02.03	2014/04/05 10:00
3	9999999	02.01	2014/02/21 10:00
2	9999999	02.00	2013/11/30 10:00
1	9999999	02.02	2013/11/24 10:00

(9) **Service Call Log**

#	Count.	Service Code	Date and Time
8	9999999	01.00.0100	2014/07/05 10:00
7	9999999	02.01.0100	2014/07/04 10:00
6	9999999	01.01.0000	2014/06/26 10:00
5	9999999	01.00.0000	2014/05/01 10:00
4	9999999	01.01.0000	2014/04/05 10:00
3	9999999	02.00.0000	2014/02/21 10:00
2	9999999	02.00.0000	2013/11/30 10:00
1	9999999	01.00.0000	2013/11/24 10:00

(11) **Toner Log**

#	Count.	Item	Serial Number	Date and Time
5	9999999	01.00	0123456789ABCDEF	2014/05/01 10:00
4	9999999	01.00	0123456789ABCDEF	2014/04/05 10:00
3	9999999	01.00	0123456789ABCDEF	2014/02/21 10:00
2	9999999	01.00	0123456789ABCDEF	2013/11/30 10:00
1	9999999	01.00	0123456789ABCDEF	2013/11/24 10:00

ECOSYS

1

Detail of event log (2)

Event Log

KYOCERA

Printer
ECOSYS P2040dw

XXXXXXXXXXXXXXXX

(2) 2014/10/19 15:15

(1) Firmware version 2RY_2000.000.000 2014.09.19

[XXXXXXXX] (3) [XXXXXXXX] (4) [XXXXXXXX] (5)

(6) Machine No.:Z7T0000000 (7) Life Count:100000

(12) **Counter Log**

(f)
J0000 : 1
J0001 : 2
J0002 : 3
J0003 : 4
J0004 : 5
J0005 : 6
J0006 : 7
J0007 : 8
J0008 : 9
J0009 : 10
J0010 : 20
J0011 : 30
J0012 : 40
J0013 : 50
J0014 : 60
J0015 : 70
J0016 : 80
J0017 : 90
J0018 : 100
J0019 : 110
J0020 : 120
J0021 : 130
J0022 : 140
J0023 : 150
J0024 : 160
J0025 : 170
J0026 : 180
J0027 : 190
J0028 : 200
J0029 : 300
J0030 : 400
J0031 : 500
J0032 : 600
J0033 : 700
J0034 : 800
J0035 : 900
J0035 : 999
J0036 : 999
J0037 : 999
J0038 : 999
J0039 : 999
J0040 : 999

(g)
C0001 : 1
C0002 : 2
C0003 : 3
C0004 : 4
C0005 : 5
C0006 : 6
C0007 : 7
C0008 : 8
C0009 : 9
C0010 : 10
C0011 : 11
C0012 : 12
C0013 : 13
C0014 : 14
C0015 : 15
C0016 : 16
C0017 : 17
C0018 : 18
C0019 : 19
C0020 : 20
CF245: 21 (0)
CF248: 22 (11)
CF345: 222 (111)

(h)
T00 : 10
T01 : 20
T02 : 30
T03 : 40
M00 : 50
M01 : 60
M02 : 70
M03 : 80
M04 : 90

ECOSYS®

2

Description of event log

No.	Contents			
(1)	System version			
(2)	System date			
(3)	Engine firmware version			
(4)	Engine boot version			
(5)	Operation panel firmware version			
(6)	Machine serial number			
(7)	Life counter			
(8)	Paper Jam Log			
	#	Count.	Event Descriptions	Date and Time
	Remembers 1 to 16 of occurrence. If the past paper jam occurrence is less than 16, all of them are indicated. The oldest log is deleted when exceeding 16 events.	The total page count at the time of a paper jam.	Log code (5 types in hexa-decimal) (a) Cause of paper jam (b) Paper source (c) Paper size (d) Paper type (e) Paper eject	Date and time of occur-rence
	(a)Detail of Cause of paper jam (Hexadecimal)			
	*Refer to [7-1 (3) Terms of paper jam detection] for the cause details of paper jam. (See page 7-24)			
	(b) Detail of paper source (Hexadecimal)			
	00: MP tray 01: Cassette 1 02: Cassette 2 (paper feeder) 03: Cassette 3 (paper feeder) 04 to 09: Reserved			
	(c) Detail of paper size (Hexadecimal)			
	00: Not specified 01: Monarch 02: Business 03: International DL 04: International C5 05: Executive 06: Letter-R 86: Letter-E 07: Legal 08: A4R 88: A4E 09: B5R 89: B5E 0A: A3	0B: B4 0C: Ledger 0D: A5R 0E: A6 0F: B6 10: Commercial #9 11: Commercial #6 12: ISO B5 13: Custom size 1E: C4 1F: Hagaki 20: Oufuku Hagaki 21: Oficio II	22: Special 1 23: Special 2 24: A3 Wide 25: Ledger Wide 26: Full bleed paper (12 x 8) 27: 8K 28: 16K-R A8: 16K-E 32: Statement-R B2: Statement-E 33: Folio 34: Youkei type 2 35: Youkei type 4	

No.	Contents			Items
(8) cont.	Paper Jam Log			
	(d) Detail of paper type (Hexadecimal)			
	01: Plain 02: Transparency 03: Preprinted 04: Labels 05: Bond 06: Recycled 07: Vellum 08: Rough 09: Letterhead	0A: Color 0B: Prepunched 0C: Envelope 0D: Cardstock 0E: Coated 0F: 2nd side 10: Media 16 11: High quality	15: Custom 1 16: Custom 2 17: Custom 3 18: Custom 4 19: Custom 5 1A: Custom 6 1B: Custom 7 1C: Custom 8	
(9)	Service Call Log			
	#	Count.	Service Code	Date and Time
	Remembers 1 to 8 th of occurrence of self diagnostics error. If the occurrence of the previous self-diagnostic error is 8 or less, all of the diagnostics errors are logged.	The total page count at the time of the self diagnostic error.	Self diagnostic error code (See page 7-58) Example: 01.6000 Self diagnostic error6000: Self diagnostic error code number	Date and time of occurrence
(10)	Maintenance Log			
	#	Count.	item	Date and Time
	Remembers 1 to 8 of occurrence of unknown toner detection. If the occurrence of the previous unknown toner detection is less than 8, all of the unknown toner detection are logged.	Total page count at the time of the replacement of the maintenance item. The toner replacement log is triggered by toner empty. This record may contain such a reference as the toner container is inserted twice or a used toner container is inserted.	Maintenance item code (1-byte value to indicate 2 items) First byte (Replacing item) 01: Toner container Second 1 byte (replacement item type) 00: Black First byte (Replacing item) 02: Maintenance kit Second 1 byte (replacement item type) 01: MK-1200	Date and time of occurrence

No.	Contents			Items
(11)	Toner Log			
	#	Count.	Item. Serial Number	Date and Time
	Remembers 1 to 32 of occurrence of unknown toner detection. If the occurrence of the previous unknown toner detection is less than 32, all of the unknown toner detection are logged.	The total page count at the time of the request of toner container replacement.	Unknown toner log code (1 byte, 2 categories) First byte (Replacing item) 01: Toner container (Fixed to 01) Second byte (Type of replacing item) 00: Black Last 16 digits Displays the serial number of the toner container	Date and time of occur-rence
(12)	(f) Paper jam	(g) Self diagnostic error	(h) Replacement for main-tenance Items	
	Indicates the log counter of paper jams depending on location. Refer to Paper Jam Log. All instances including those not having occurred are displayed.	Indicates the log counter of self diagnostics errors depending on cause. Example: C6000: 004 Self diagnostic error 6000 has happened four times.	Indicates the log counter depending on the mainte-nance replacing item. T: Toner container 00: Black 01: Cyan 02: Magenta 03: Yellow M: Maintenance kit 01: MK-1200 Example: T00: 1 The toner container (Black) has been replaced once. The toner replacement log is triggered by toner empty. This record may contain such a reference as the toner container is inserted twice or a used toner con-tainer is inserted.	Counter Log Consist of three log counters of paper jams, self diagnos-tics errors, and main-tenance replace-ment items.

7 Troubleshooting
7-1 Image formation failure

(Main charge --> Drum --> LSU --> Developer --> Transfer image formation process failure)

<Image data flow>

Printing data from PC :

(1) Engine Factors (Paper conveying cause: Transfer, Fuser and Separation)

No.	Contents	Image sample
(1-1)	spots	
(1-2)	Horizontal streaks or bands	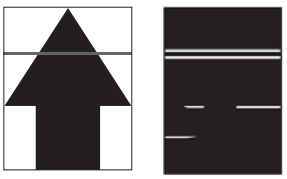
(1-3)	Vertical streaks or bands (white)	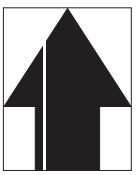
(1-4)	Vertical streaks or bands	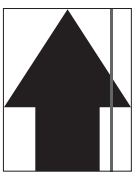
(1-5)	Center of the original and output image is inconsistent	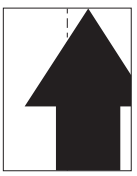

No.	Contents	Image sample
(1-6)	Irregular error in the leading edge between original and output image (variation in the paper leading edge timing)	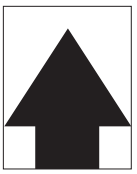
(1-7)	Blank image	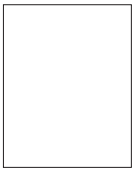
(1-8)	The image is not partly printed (blank or white spots)	
(1-9)	The entire image is light	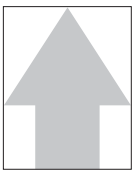
(1-10)	Blurred image	
(1-11)	Blurred characters	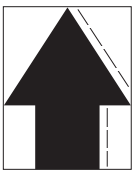
(1-12)	Toner smudge at the paper edge	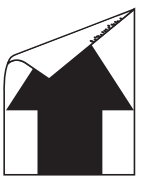
(1-13)	Dirty reverse side	

No.	Contents	Image sample
(1-14)	Offset image	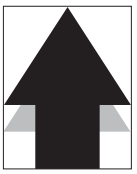
(1-15)	Color reproduction is poor	
(1-16)	Fusing failure	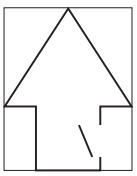
(1-17)	Paper skew	
(1-18)	Uneven transfer	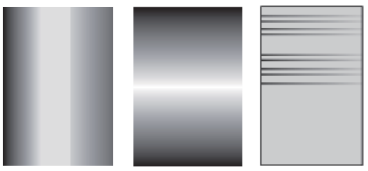
(1-19)	Paper creases	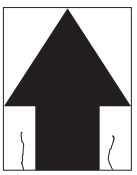

Content of Engine Factors (Paper conveying cause: Transfer, Fuser and Separation)

(1-1) spots

Step	Check description	Assumed cause	Measures	Reference
1	Checking the transfer roller	The transfer roller is dirty or scratched.	Clean the transfer roller if the image failure appears in the circumference interval. If not repaired, replace the transfer roller.	
2	Checking the fuser unit	The fuser belt is dirty or scratched.	Clean the fuser belt if the image failure appears in the circumference interval. If not repaired, replace the fuser unit.	

(1-2) Horizontal streaks or bands

Step	Check description	Assumed cause	Measures	Reference
1	Cleaning the fuser belt	The fuser belt is dirty.	Clean the fuser belt if the image failure appears in the circumference interval.	
2	Checking the transfer roller	The press spring is not attached properly or deformed.	Reattach the press spring. If not repaired, replace the transfer roller.	

(1-3) Vertical streaks or bands (white)

Step	Check description	Assumed cause	Measures	Reference
1	Checking the transfer roller	The transfer roller is dirty or scratched.	Clean the transfer roller if the image failure appears in the circumference interval. If not repaired, replace the transfer roller.	
2	Reattaching the FD guide	The FD guide contacts the paper too stiffly.	Check the paper warpage at output and reattach the FD guide.	

(1-4) Vertical streaks or bands

Step	Check description	Assumed cause	Measures	Reference
1	Changing the settings	The media type is not properly set.	Select the proper media type in the system menu.	
2	Cleaning the FD guide	The FD guide is dirty with toner or toner adheres to it.	Clean the FD guide.	
3	Cleaning the separation needle	The separation needles are dirty with paper dust or toner.	Clean the separation needle at the transfer/separation section with a cleaning blush.	
4	Checking the transfer roller	The transfer roller is dirty, deformed or worn down.	Clean the transfer roller if the image failure appears in the circumference interval. If not repaired, replace the transfer roller.	

(1-5) Center of the original and output image is inconsistent

Step	Check description	Assumed cause	Measures	Reference
1	Re-setting the guide	The guide is not aligned to the paper size.	Align the paper width guide, paper guide (MP tray) or PF paper width guide (paper feeder) to the paper size and re-load paper.	
2	Executing U034	The center line is not adjusted properly.	Adjust the center line in U034 [LSU Out Left].	

(1-6) Irregular error in the leading edge between original and output image (variation in the paper leading edge timing)

Step	Check description	Assumed cause	Measures	Reference
1	Executing U034	The leading edge timing is not properly adjusted.	Adjust the leading edge timing at U034 [LSU Out Top].	
2	Checking the feed clutch and registration clutch	The feed clutch and registration clutch operation is faulty.	Reattach the feed clutch and registration clutch and reconnect the connectors. If not repaired replace them.	

(1-7) Blank image

Step	Check description	Assumed cause	Measures	Reference
1	Replacing the main/engine PWB	The transfer high voltage on signal (5V -> 0V) is not generated from the main/engine PWB.	Replace the main/engine PWB.	
2	Replacing the high voltage PWB	The transfer bias output from the high voltage PWB is faulty.	Replace the high voltage PWB.	

(1-8) The image is not partly printed (blank or white spots)

Step	Check description	Assumed cause	Measures	Reference
1	Replacing the paper	The paper is damp.	Replace with the dry paper.	
2	Checking the paper storage place	Paper is stored in the high humidity environment.	Ask users to store paper in a dry place. Put the dry paper into the plastic bag and seal the bag to prevent moisture from getting in.	
3	Changing the settings	The media type is not properly set.	• TSI model: Set proper media type at [System Menu/Counter] key > [Common Setting] > [Paper Settings] > [Cassette1-3] or [MP Tray] • LCD model: Set proper media type at [System Menu/Counter] key > [Common Setting] > [Orig./Paper Set.] > [Cassette1-3] or [MP Tray]	

Step	Check description	Assumed cause	Measures	Reference
4	Checking the transfer roller	The transfer roller is dirty or scratched.	Clean the transfer roller if the image failure appears in the circumference interval. If not repaired, replace the transfer roller.	

(1-9) The entire image is light

Step	Check description	Assumed cause	Measures	Reference
1	Replacing the paper	The paper is damp.	Replace the paper.	
2	Checking the paper storage place	Paper is stored in the high humidity environment.	Ask users to store paper in a dry place. Put the dry paper into the plastic bag and seal the bag to prevent moisture from getting in.	
3	Replacing the high voltage PWB	The transfer bias output from the high voltage PWB is faulty.	Replace the high voltage PWB.	

(1-10) Blurred image

Step	Check description	Assumed cause	Measures	Reference
1	Replacing the paper	The paper is damp.	Replace with the new dry paper.	
2	Checking the paper storage place	Paper is stored in the high humidity environment.	Ask users to store paper in a dry place. Put the dry paper into the plastic bag and seal the bag to prevent moisture from getting in.	

(1-11) Blurred characters

Step	Check description	Assumed cause	Measures	Reference
1	Replacing the paper	Unspecified papers are used.	Replace with the paper within the specification.	
2	Changing the settings	The media type is not properly set.	Select the proper media type in the system menu.	
3	Applying the grease	The main motor drive is not transmitted smoothly.	Apply grease to the drive gears.	
4	Replacing the conveying guide	The conveying guide is deformed.	Replace the conveying guide.	
5	Replacing the fuser unit	The fuser front guide is deformed or the fuser pressure is uneven.	Replace the fuser unit.	

(1-12) Toner smudge at the paper edge

Step	Check description	Assumed cause	Measures	Reference
1	Cleaning the conveying guide	The conveying guide is dirty with toner.	Clean the conveying guide, developer unit and developer duct.	

(1-13) Dirty reverse side

Step	Check description	Assumed cause	Measures	Reference
1	Checking the transfer roller	The transfer roller is dirty or scratched.	Clean the transfer roller if the image failure appears in the circumference interval. If not repaired, replace the transfer roller.	
2	Cleaning the fuser press roller	The fuser press roller is dirty depending on media type selection.	Clean the fuser press roller. Next, select the proper media type in the system menu.	
3	Checking the conveying guide and the developer unit	The conveying guide or developer unit is dirty.	Clean the conveying guide and developer unit.	

(1-14) Offset image

Step	Check description	Assumed cause	Measures	Reference
1	Checking the paper	Unspecified papers are used.	Replace with paper within specification or set media type to the closest one.	
2	Changing the settings	The media type is not properly set.	Change the setting depending on the paper type and weight.	
3	Cleaning the transfer roller	The transfer roller is dirty.	Clean the transfer roller if the image failure appears in the circumference interval.	
4	Cleaning the fuser belt	The fuser belt is dirty.	Clean the fuser belt if the image failure appears in the circumference interval.	
5	Replacing the high voltage PWB	The high voltage PWB is faulty.	Replace the high voltage PWB.	
6	Replacing the fuser unit	The fuser belt surface is scratched.	Replace the fuser unit.	

(1-15) Color reproduction is poor

Step	Check description	Assumed cause	Measures	Reference
1	Replacing the paper	The paper is damp.	Replace the paper.	
2	Checking the paper storage place	Paper is stored in the high humidity environment.	Ask users to store paper in a dry place. Put the dry paper into the plastic bag and seal the bag to prevent moisture from getting in.	

Step	Check description	Assumed cause	Measures	Reference
3	Checking the paper	Rough paper for monochrome print is used.	Use the color paper with smooth surface that fits for color print.	
4	Changing the settings	Installation environment is high altitude.	Execute [Altitude Adjustment] at [System Menu/Counter] key > [Adjustment/Maintenance] > [Service Settings] to set the proper mode.	
5	Checking the developer unit	Toner in the developer unit is degraded.	Consume degraded toner in the developer unit with test prints and replenish the toner.	
6	Reinstalling the main charger unit and drum unit	The main charger unit or drum unit is not attached properly.	Reattach the main charger unit and drum unit.	

(1-16) Fusing failure

Step	Check description	Assumed cause	Measures	Reference
1	Replacing the paper	Unspecified papers are used.	Replace with the proper paper.	
2	Changing the settings	The media type is not properly set.	Select the proper media type in the system menu.	
3	Firmware upgrade	The firmware is not the latest version.	Upgrade the firmware to the latest version.	
4	Replacing the fuser unit	The nipped pressure (width) to the solid image is low and fuser pressure setting (spring) is too weak.	Replace the fuser unit.	

(1-17) Paper skew

Step	Check description	Assumed cause	Measures	Reference
1	Re-setting the guide	The guide is not aligned to the paper size.	Align the paper width guide, paper guide (MP tray) or PF paper width guide (paper feeder) to the paper size and reload paper.	
2	Checking the guide	The guide is not attached properly or faulty.	Reattach the paper width guide, paper guide (MP tray) or PF paper width guide (paper feeder). If not repaired, replace it.	

(1-18) Uneven transfer

Step	Check description	Assumed cause	Measures	Reference
1	Cleaning the transfer roller	The transfer roller is dirty.	Clean the transfer roller if the image failure appears in the circumference interval.	

Step	Check description	Assumed cause	Measures	Reference
2	Replacing the transfer roller	The transfer roller is faulty or not attached properly.	Correct the deformation of the press spring. If not repaired, replace the transfer roller.	
3	Replacing the high voltage PWB	The high voltage contact on the high voltage PWB is deformed or broken.	Replace the high voltage PWB.	
4	Replacing the fuser unit	The roller, drive section or fuser pressure release mechanism is deformed or worn down.	Replace the fuser unit.	

(1-19) Paper creases

Step	Check description	Assumed cause	Measures	Reference
1	Re-setting the guide	The guide is not aligned to the paper size.	Align the paper width guide, paper guide (MP tray) or PF paper width guide (paper feeder) to the paper size and reload paper.	
2	Replacing the paper	The paper is curled or wavy.	Replace the paper.	
3	Checking the paper storage place	Paper is stored in the high humidity environment.	Ask users to store paper in a dry place. Put the dry paper into the plastic bag and seal the bag to prevent moisture from getting in.	
4	Checking the pressure spring	The pressure springs are not attached properly at both ends of the registration roller, so the pressure balance is uneven.	Reattach the pressure springs at both sides of the registration roller.	
5	Replacing the fuser unit	The pressure springs at the machine front and rear ends of the fuser unit are not properly attached.	Check the pressure balance of both ends of the fuser unit by checking the nipped pressure on the solid image. If the balance is uneven, replace the fuser unit.	

(2) Engine Factors (Image forming cause)

No.	Contents	Image sample
(2-1)	Background is colored	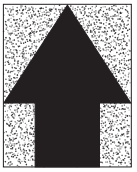
(2-2)	Black dots	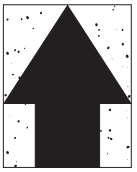
(2-3)	Horizontal streaks or bands (white/black)	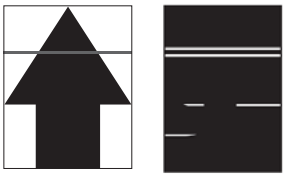
(2-4)	Irregular horizontal streaks and bands (black)	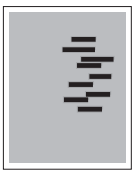
(2-5)	Vertical streaks or bands (white)	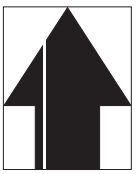
(2-6)	Vertical streaks and bands (black)	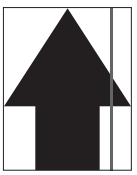
(2-7)	Blank image	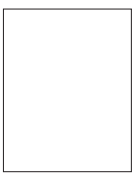

No.	Contents	Image sample
(2-8)	Entire blank image (black)	
(2-9)	Part of the image is not copied	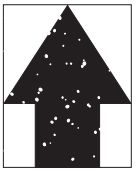
(2-10)	The entire image is light	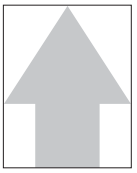
(2-11)	Blurred image	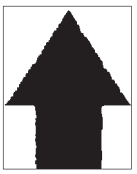
(2-12)	Offset image	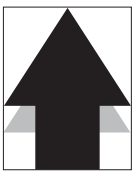
(2-13)	Horizontal uneven density	
(2-14)	Vertical uneven density	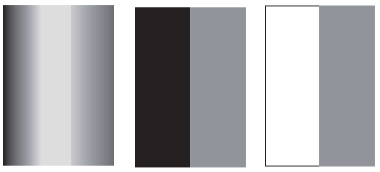

Content of Engine Factors (Image forming cause)

(2-1) Background is colored

Step	Check description	Assumed cause	Measures	Reference
1	Checking the developer bias contact	The developer bias contact is dirty or deformed.	Clean the developer bias contact or correct it to secure ground.	
2	Checking the temperature inside the main unit	Temperature is low in the installation environment.	When the in-machine temperature is 16°C / 60.8°F or less, request the user to change the installation environment where the room temperature is warmer than 16°C / 60.8°F.	
3	Reinstalling the drum unit	The drum unit does not ground.	Reattach the main charger unit to the drum unit and reattach the drum unit to the main unit so that it is securely grounded.	
4	Cleaning the main charger wire	The main charger wire surface is dirty.	Clean the main charger wire surface. If not repaired, replace the main charger unit.	
5	Checking the connection	The connector is not properly connected or the wire is faulty.	Clean the terminal of the following wire connectors and reconnect the connectors. If there is no continuity, replace the wire. • High voltage PWB - Main/engine PWB (YC16)	
6	Replacing the high voltage PWB	The high voltage contact on the high voltage PWB is deformed or broken.	Replace the high voltage PWB.	
7	Replacing the main/engine PWB	The main/engine PWB is faulty.	Replace the main/engine PWB.	

(2-2) Black dots

Step	Check description	Assumed cause	Measures	Reference
1	Executing Drum refresh	The drum surface is dirty.	Execute Drum refresh.	
2	Replacing the drum unit	There are some scratches on the drum surface.	Replace the drum unit.	
3	Cleaning the main charger wire	The main charger wire surface is dirty.	Clean the main charger wire surface. If not repaired, replace the main charger unit.	
4	Changing the settings	Developer bias leaks.	Execute [Altitude Adjustment] at [System Menu/Counter] key > [Adjustment/Maintenance] > [Service Settings] to set the proper mode.	
5	Checking the developer unit	The developer roller and magnet roller are dirty or faulty.	Clean the developer roller. If not repaired, replace the developer unit.	

(2-3) Horizontal streaks or bands (white/black)

Step	Check description	Assumed cause	Measures	Reference
1	Checking the developer unit	Both ends of the developer roller are dirty and it causes the developer bias leakage.	Clean both ends of the developer roller and main charger contact.	
2	Replacing the developer unit	Both ends of the developer roller and the developer bias contact are deteriorated and it causes the developer bias leakage.	Replace the developer unit.	
3	Executing Drum refresh	The drum surface is dirty.	Execute Drum refresh.	
4	Replacing the drum unit	There are some scratches on the drum surface.	Replace the drum unit.	
5	Cleaning the main charger wire	The main charger wire surface is dirty.	Clean the main charger wire surface. If not repaired, replace the main charger unit.	
6	Changing the settings	The electric charge remains on the drum surface due to insufficient discharging.	Execute [MC] at [System Menu/Counter] key > [Adjustment/Maintenance] > [Service Settings] to reduce the main charger output value.	
7	Checking the connection	The connector is not properly connected or the wire is faulty.	Clean the terminal of the following wire connectors and reconnect the connectors. If there is no continuity, replace the wire. • High voltage PWB - Main/engine PWB (YC16)	
8	Replacing the high voltage PWB	The bias voltage is generated unevenly from the high voltage PWB since the PWB is faulty.	Replace the high voltage PWB.	
9	Replacing the main/engine PWB	The main/engine PWB is faulty.	Replace the main/engine PWB.	

(2-4) Irregular horizontal streaks and bands (black)

Step	Check description	Assumed cause	Measures	Reference
1	Changing the settings	The settings do not match the installation environment (High altitude exceeding 1,500m above sea-level).	Execute [Altitude Adjustment] at [System Menu/Counter] key > [Adjustment/Maintenance] > [Service Settings] to set the proper mode.	
2	Correcting the main charger contact	The main charger contact is not grounded.	Correct the main charger contact for secure ground.	
3	Reinstalling the drum unit	The drum unit is not properly installed, so it does not ground the drum drive shaft.	Reattach the drum unit.	

Step	Check description	Assumed cause	Measures	Reference
4	Replacing the paper	Paper with the high surface resistance is used.	Replace with the recommended paper.	

(2-5) Vertical streaks or bands (white)

Step	Check description	Assumed cause	Measures	Reference
1	Executing Drum refresh	The drum surface is dirty.	Execute Drum refresh.	
2	Cleaning the LSU glass	The LSU glass is dirty.	Clean the LSU glass.	
3	Checking the laser path	There are foreign objects on the laser path of the LSU.	Remove foreign objects on the frame or sealing material between the developer unit and the drum unit.	
4	Replacing the developer unit	Foreign objects are in the developer unit.	Replace the developer unit.	
5	Cleaning the main charger wire	The main charger wire surface is dirty.	Clean the main charger wire surface. If not repaired, replace the main charger unit.	
6	Replacing the drum unit	There are some scratches on the drum surface.	Replace the drum unit.	

(2-6) Vertical streaks and bands (black)

Step	Check description	Assumed cause	Measures	Reference
1	Executing Drum refresh	The drum surface is dirty.	Execute Drum refresh.	
2	Replacing the drum unit	The drum surface is worn down.	Replace the drum unit.	
3	Cleaning the main charger wire	Streaky dirt adhere to the main charger wire surface.	Clean the main charger wire surface.	
4	Replacing the main charger unit	The main charger wire surface is altered.	Replace the main charger unit.	
5	Checking the developer unit	Foreign objects are on the developer roller surface.	Clean the developer roller. If not repaired, replace the developer unit.	

(2-7) Blank image

Step	Check description	Assumed cause	Measures	Reference
1	Checking the developer bias contact	The developer bias contact is dirty or deformed.	Clean the developer bias contact, or correct its shape so that it grounds securely.	
2	Replacing the developer unit	The developer unit side gear is faulty.	Replace the developer unit.	
3	Checking the connection	The FFC is not properly connected or faulty.	Reconnect the FFC. If the FFC terminal is peel, deformed or broken, replace it. • LSU (APC PWB) - Main/engine PWB (YC505)	

Step	Check description	Assumed cause	Measures	Reference
4	Checking the connection	The connector is not properly connected or the wire is faulty.	Clean the terminal of the following wire connectors and reconnect the connectors. If there is no continuity, replace the wire. • High voltage PWB - Main/engine PWB (YC16)	
5	Checking the developer clutch	The developer clutch or drive parts do noto operate properly.	Reattach the developer clutch and reconnect the connector. If not repaired, replace it.	
6	Replacing the high voltage PWB	The high voltage PWB is faulty.	Replace the high voltage PWB.	
7	Replacing the LSU	The APC PWB in the LSU is faulty.	Replace the LSU.	
8	Replacing the main/engine PWB	The main/engine PWB is faulty.	Replace the main/engine PWB.	

(2-8) Entire blank image (black)

Step	Check description	Assumed cause	Measures	Reference
1	Reinstalling the drum unit	The drum unit or main charger unit is not attached properly.	Reattach the main charger unit to the drum unit and reattach the drum unit to the main unit so that it is securely grounded.	
2	Checking the main charger contact	The main charger contact is dirty or deformed.	Clean the main charger contact and correct it for secure grounding.	
3	Checking the developer bias contact	The developer bias contact is dirty or deformed.	Clean the developer bias contact or correct it to secure ground.	
4	Checking the connection	The FFC is not properly connected or faulty.	Reconnect the FFC. If the FFC terminal is peel, deformed or broken, replace it. • LSU (APC PWB) - Main/engine PWB (YC505)	
5	Checking the connection	The connector is not properly connected or the wire is faulty.	Clean the terminal of the following wire connectors and reconnect the connectors. If there is no continuity, replace the wire. • High voltage PWB - Main/engine PWB (YC16)	
6	Replacing the high voltage PWB	The high voltage PWB is faulty.	Replace the high voltage PWB.	
7	Replacing the LSU	The LSU is dirty or faulty.	Replace the LSU.	
8	Replacing the main/engine PWB	The main/engine PWB is faulty.	Replace the main/engine PWB.	

(2-9) Part of the image is not copied

Step	Check description	Assumed cause	Measures	Reference
1	Executing Drum refresh	The drum surface is dirty.	Execute Drum refresh.	
2	Cleaning / replacing the transfer roller	The transfer roller is dirty or deformed.	Clean the transfer roller. If not repaired, replace the transfer roller.	

(2-10) The entire image is light

Step	Check description	Assumed cause	Measures	Reference
1	Reinstalling the toner container	Toner is collected on one side.	Sufficiently shake the toner container and reinstall it to the main unit.	
2	Executing Drum refresh	The drum surface has condensation.	Execute Drum refresh.	
3	Replacing the toner container	The toner supply opening does not open.	Replace the toner container.	
3	Replenishing toner in the developer unit	Toner in the developer unit is degraded due to many low coverage prints.	Consume degraded toner in the developer unit with test prints and replenish the toner.	
4	Reinstalling the drum unit and developer unit	The drum unit or the developer unit is not properly attached, so that the developer roller does not contact the drum.	Reinstall the drum unit and developer unit.	
5	Correcting the developer bias contact	The developer bias contact is deformed.	Correct the developer bias contact so that it surely grounds.	
6	Cleaning the DS pulley	The DS pulleys are dirty.	Clean the DS pulleys at both ends of the developer unit.	
7	Replacing the developer unit	The DS pulleys are faulty.	Replace the developer unit.	
8	Replacing the drum unit	The drum surface is worn down.	Replace the drum unit.	
9	Correcting the main charger contact	The voltage impressed to the main charger contact is high.	Correct the main charger contact for secure ground.	
10	Checking the connection	The FFC is not properly connected or faulty.	Reconnect the FFC. If the FFC terminal is peel, deformed or broken, replace it. • LSU (APC PWB) - Main/engine PWB (YC505)	
11	Checking the connection	The connector is not properly connected or the wire is faulty.	Clean the terminal of the following wire connectors and reconnect the connectors. If there is no continuity, replace the wire. • High voltage PWB - Main/engine PWB (YC16)	
12	Replacing the high voltage PWB	The high voltage PWB is faulty.	Replace the high voltage PWB.	

Step	Check description	Assumed cause	Measures	Reference
13	Replacing the LSU	The LSU is dirty or faulty.	Replace the LSU.	
14	Replacing the main/engine PWB	The main/engine PWB is faulty.	Replace the main/engine PWB.	

(2-11) Blurred image

Step	Check description	Assumed cause	Measures	Reference
1	Executing Drum refresh	The drum surface has condensation.	Execute Drum refresh.	
2	Cleaning the LSU glass	The LSU glass is dirty.	Clean the LSU glass.	
3	Replacing the LSU	The LSU glass is deteriorated.	Replace the LSU.	

(2-12) Offset image

Step	Check description	Assumed cause	Measures	Reference
1	Executing Drum refresh	The drum surface is dirty.	Execute Drum refresh.	
2	Replacing the drum unit	The drum surface is worn down or scratched.	Replace the drum unit.	
3	Cleaning the developer roller	The developer roller is dirty	Clean the developer roller.	
4	Replacing the developer unit	The developer roller surface is worn down or scratched.	Replace the developer unit.	

(2-13) Horizontal uneven density

Step	Check description	Assumed cause	Measures	Reference
1	Cleaning the DS pulley	The DS pulleys are dirty.	Clean the DS pulleys at both ends of the developer unit.	
2	Replacing the developer unit	The DS pulleys are faulty.	Replace the developer unit.	
3	Checking the developer bias contact	The conduction is not stabilized due to the dirty developer bias contact.	Clean the developer bias contact.	
4	Replenishing toner in the developer unit	Toner in the developer unit is degraded.	Consume degraded toner in the developer unit with test prints and replenish the toner.	
5	Executing Drum refresh	Toner smudges in the shape of a streak are on both ends of the drum surface.	Execute Drum refresh.	

Step	Check description	Assumed cause	Measures	Reference
6	Changing the settings	The electric charge remains on the drum surface due to insufficient discharging.	Execute [MC] at [System Menu/Counter] key > [Adjustment/Maintenance] > [Service Settings] to reduce the main charger output value.	
7	Replacing the drum unit	The drum surface is worn down.	Replace the drum unit.	
8	Replacing the LSU	The laser emission is uneven.	Replace the LSU.	

(2-14) Vertical uneven density

Step	Check description	Assumed cause	Measures	Reference
1	Executing Drum refresh	The drum surface has condensation.	Execute Drum refresh.	
2	Replacing the LSU	The laser is not evenly emitted from the LSU (The internal mirror comes off).	Replace the LSU.	
3	Cleaning the main charger wire	Dirt adheres to the main charger wire.	Clean the main charger wire surface. If not repaired, replace the main charger unit.	
4	Replacing the drum unit	The drum surface is worn down.	Replace the drum unit.	
5	Replacing the developer unit	The toner layer on the developer roller is uneven.	Replace the developer unit.	

7-2 Feeding/Conveying Failures

(1) Prior standard check items

Content of Feeding/Conveying Failures

(1-1) Paper jam due to the cover-open detection

Step	Check description	Assumed cause	Measures	Reference
1	Opening / closing the front cover	The front cover is not engaged.	Open/close the front cover.	
2	Re-loading / replacing paper	The paper fanning is not enough or the cutting edge of loaded paper is damaged.	Fan the paper well and re-load paper after switching top and bottom ends. If the paper is folded, correct or replace it.	
3	Re-loading paper	The paper is wavy.	Correct or replace paper. If difficult to replace, re-load paper by switching top and bottom ends or turning it over.	
4	Checking the paper	Paper out of specification is used or foreign objects adhere to paper.	Ask a user to use the specified paper type. Or, remove the paper with foreign objects.	
5	Re-loading paper	The paper is not properly loaded.	Reload paper in the cassette.	

(1-2) Paper jam due to the wave or curl in the fuser section of the damp paper

Step	Check description	Assumed cause	Measures	Reference
1	Re-loading paper	The paper curls.	Reload paper upside down.	
2	Re-loading paper	The paper fanning is not enough.	Fan the paper well and load it by reversing the paper direction	
3	Replacing the paper	The paper is damp.	Replace the paper.	

(1-3) Paper jam due to dog-ear, skew, crease. fusing failure, curl, etc.

Step	Check description	Assumed cause	Measures	Reference
1	Checking the paper path and the paper	Paper is caught up by a piece of paper or paper leading edge is bent.	If there is a piece of paper, foreign object or burr on the part on the conveying path, remove them. If the paper leading edge is bent, remove the paper.	
2	Changing the settings	Media type is not set properly.	Select the proper media type in the system menu.	

(1-4) Paper jam due to the guide factor

Step	Check description	Assumed cause	Measures	Reference
1	Checking the paper path	The paper is caught with a piece of paper, etc.	If there is a piece of paper, foreign object or burr on the part on the conveying path, remove them.	
2	Cleaning the guide and separation needle	The guide and separation needle are dirty.	If the guide or separation needle is dirty with toner or paper dust, clean it with a cleaning cloth or brush.	
3	Reattaching / replacing the guide	The guide does not properly operate due to the incorrect attachment or a fault.	If the guide does not smoothly move manually, reattach it. If not repaired, replace it.	
4	Checking the solenoid	The solenoid does not operate properly.	Test print and check the guide operation with the operation sound. If the guide does not operate or it is not smooth, reattach the guide. If not repaired, replace the solenoid.	

(1-5) Paper jam due to paper loading failure at the paper source

Step	Check description	Assumed cause	Measures	Reference
1	(When skewing, creasing, paper jam occurs) Re-setting the guide.	The guide is not aligned to the paper size.	Align the paper width guide, paper guide (MP tray) or PF paper width guide (paper feeder) to the paper size and reload paper.	
2	Re-loading paper	The paper fanning is not enough.	Fan paper and reload it in the paper source. If a part of the paper is bent, remove it.	

(1-6) Paper jam due to the inferior paper

Step	Check description	Assumed cause	Measures	Reference
1	Replacing the paper	Unspecified papers are used.	Explain to the user to use the paper within the specifications.	

(1-7) Paper jam caused by conveying rollers and pulleys

Step	Check description	Assumed cause	Measures	Reference
1	Cleaning / replacing the roller and pulley	The roller and pulley are dirty.	If paper dust, toner or foreign object adheres to the roller or pulley, clean it. If there is variation in the external diameter or wear, replace it.	

Step	Check description	Assumed cause	Measures	Reference
2	Operation check	The clutch does not operate properly.	Test print and check the related motor operation with the operation sound. Check the clutch operation. If the clutch does not operate, go to the next step. (If the motor operation is faulty, execute the treatment by jam code.)	
3	Checking the clutch	The clutch is not attached properly, connector is not connected properly or foreign objects adhere to the clutch.	Reattach the clutch and reconnect the connector. If foreign objects adhere to the clutch, clean it to remove.	
4	Replacing the clutch	The clutch is faulty.	Replace the clutch (individual clutch or unit including the clutch).	
5	Cleaning the roller shaft and bushing	The roller shaft or bushing is dirty.	If more load is applied to the conveying rollers due to dirt on the roller shaft and bushing, clean there.	
6	Reattaching the spring	The spring comes off.	Check if the spring came off, or if it adequately presses the roller or the pulley, and reattach it if necessary.	

(1-8) Paper jam due to the sensor

Step	Check description	Assumed cause	Measures	Reference
1	Checking the actuator and the spring	The actuator or spring does not operate properly.	If the sensor actuator is caught up or comes off, reattach the actuator or spring. If deformed, replace them.	
2	Cleaning the sensor	The sensor is dirty.	If the sensor surface is dirty, clean it.	
3	Reattaching / replacing the sensor	The sensor is faulty.	Reattach and reconnect the sensor. If not repaired, replace it.	

(1-9) Paper jam due to setting failure or detection failure

Step	Check description	Assumed cause	Measures	Reference
1	Checking the paper leading edge margin	The leading edge margin is not enough.	When there is no margin from the paper leading edge to 4.0mm(+1.5/-0.0mm), and, when the fuser jam occurs while there is no check line on 20mm(+/-1mm) from the paper leading edge of the test pattern that is output at U034, adjust the leading margin by executing [Lead] at U402.	
2	Re-setting the guide	The paper size is misdetected.	Align the paper width guide, paper guide (MP tray) or PF paper width guide (paper feeder) to the paper size and reload paper (multi feed jam factor).	

Step	Check description	Assumed cause	Measures	Reference
3	Changing the settings	Media type is not set properly.	In case the media type setting mismatch against the actual paper thickness (jam by separation failure), set the proper media type in the system menu.	

(1-10) Paper jam due to the static electricity

Step	Check description	Assumed cause	Measures	Reference
1	Checking the ground	The static electricity accumulates.	When the main unit is installed in the low humidity environment where the static electricity easily accumulates on the conveying guide during the continuous printing, check if the discharge sheet in the exit section and the metal guide in the transfer section are grounded securely. If necessary, reattach the parts.	

(1-11) Paper jam due to paper storage environment (high humidity)

Step	Check description	Assumed cause	Measures	Reference
1	Checking the paper storage place	Papers have been stored in the improper place.	Ask users to store paper in a dry place.	

(2) Paper misfeed detection

(2-1) Paper jam indication

When a paper jam occurs, the machine immediately stops the operation and displays the paper jam message on the operation panel. Remove paper by way of pulling out the cassette, opening the front cover and rear cover when a paper jam has occurred inside the machine.
*: The locations are displayed on the operation panel when a paper jam has occurred.

When a paper jam occurs, printing stops and the [Jam] indicator is lit.
Check the paper jam location with the status monitor.

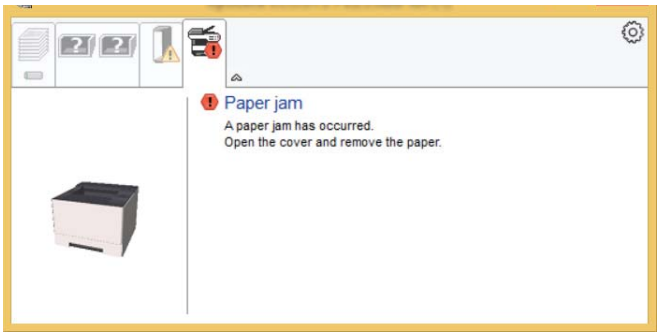

(2-2) Paper jam detection condition

Main unit + document processor + paper feeder (option)

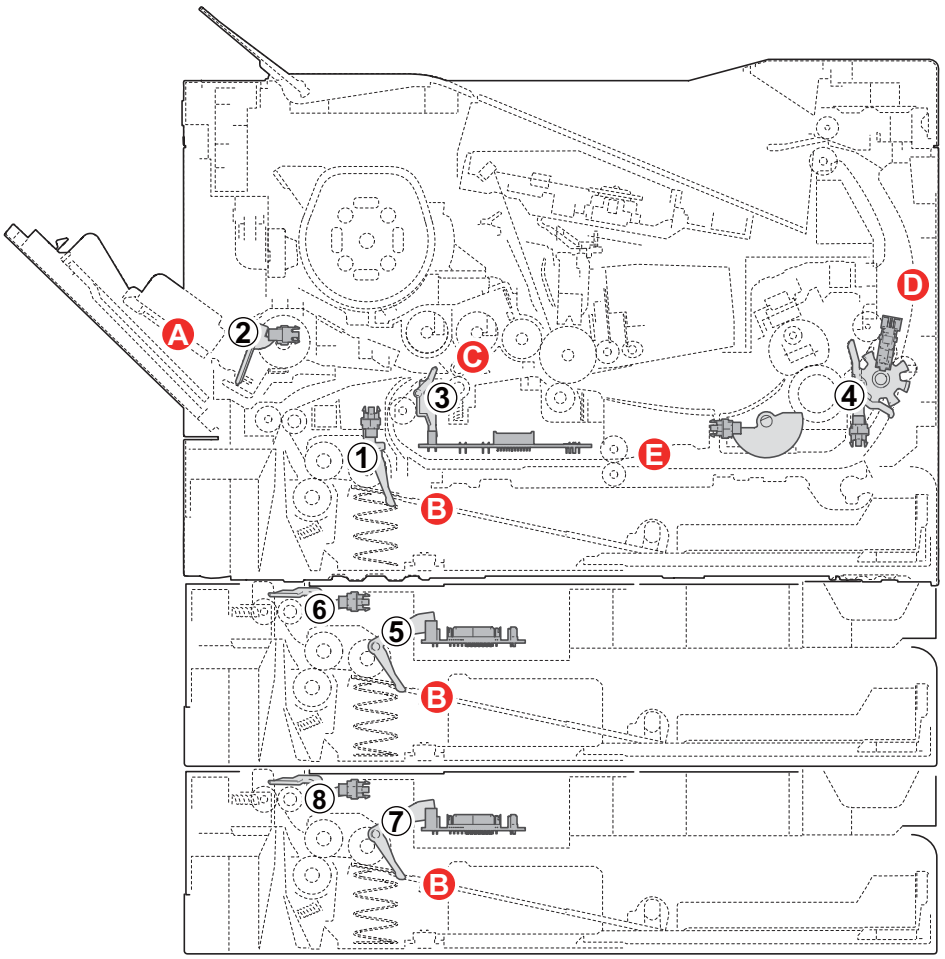

[Paper jam location]

A. MP tray paper jam
B. Paper jam in the cassette 1 (to 3)
C. Paper jam inside the front cover
D. Paper jam inside the rear cover
E. Paper jam inside the duplex unit

[sensor(paper conveying)]

1. Paper sensor
2. MP paper sensor
3. Registration sensor
4. Eject sensor
5. PF paper sensor 1
6. PF feed sensor 1
7. PF paper sensor 2
8. PF feed sensor 2

Jam code contents

Codes	Content	Detection condition	JAM Location*
0000	Initial jam	The power is turned on when a sensor in the conveying system is on.	-
0101	Wait for ready of the print-process package	40 seconds have passed without reply of StandbyReady from the driving function before the paper feeding or before the secondary paper feeding	-
0104	Wait for ready of conveying package	Before the paper feeding or the secondary paper feeding starts, the permission notice of the paper feeding or the secondary paper feeding does not come for 40 seconds.	-
0105	Drive prevention jam	A drive does not stop.	-
0106	Paper feeding request for duplex printing time out	Paper feeding request for duplex printing given by the controller is unreachable.	-
0107	Wait for ready of fuser package	Fuser package does not become ready.	-
0110	Front cover open jam	The front cover opened during printing.	-
0501	No paper feeding jam	Registration sensor does not turn on during paper feed from cassette 1.	B
0502		The PF paper feed sensor 1 does not turn on during paper feed from cassette 2.	B
0503		The PF paper feed sensor 2 does not turn on during paper feed from cassette 3.	B
0508		Registration sensor does not turn on during paper feed from duplex section.	E
0509		Registration sensor does not turn on during paper feed from MP tray.	A
0511	Multiple sheets jam	Registration sensor does not turn off during paper feed from cassette 1.	C
0512		The PF paper feed sensor 1 does not turn off during paper feed from cassette 2.	C
0513		The PF paper feed sensor 2 does not turn off during paper feed from cassette 3.	B
0518		The registration sensor does not turn off during paper feed from the duplex section.	C
0519		Registration sensor does not turn off during paper feed from MP tray.	C
1403	PF feed sensor 1 non arrival jam	The PF paper feed sensor 1 does not turn on during paper feed from cassette 3.	C
1413	PF feed sensor 1 stay jam	The PF paper feed sensor 1 does not turn off during paper feed from cassette 3.	B

Codes	Content	Detection condition	JAM Location*
4002	Regisutration sensor non arrival jam	The registration sensor does not turn on during paper feed from cassette 2.	A
4003		The registration sensor does not turn on during paper feed from cassette 3.	A
4008		Eject sensor does not turn on during paper feed from duplex section.	A
4012	Regisutration sensor stay jam	The registration sensor does not turn off during paper feed from cassette 2.	E
4013		The registration sensor does not turn off during paper feed from cassette 3.	E
4018		Eject sensor does not turn off during paper feed from duplex section.	E
4201	Fuser sensor non arrival jam	Eject sensor does not turn on during paper feed from cassette 1.	C
4202		Eject sensor does not turn on during paper feed from cassette 2.	C
4203		Eject sensor does not turn on during paper feed from cassette 3.	C
4208		Eject sensor does not turn on during paper feed from duplex section.	E
4209		Eject sensor does not turn on during paper feed from MP tray.	C
4211	Fuser sensor stay jam	Eject sensor does not turn off during paper feed from cassette 1.	D
4212		Eject sensor does not turn off during paper feed from cassette 2.	D
4213		Eject sensor does not turn off during paper feed from cassette 3.	D
4218		Eject sensor does not turn off during paper feed from duplex section.	D
4219		Eject sensor does not turn off during paper feed from MP tray.	D

* Refer to figure 7-2 for the paper JAM indication (see page7-24).

(3) Jam Codes

Error code	Contents	note
J0000	Power ON jam	
J0101/J0104/J0105/J0106	Paper jam caused by the software factor	
J0107	Fuser temperature stabilization time-out	
J0110	Right cover open detection	
J0501/J0502/J0503/ J0508/J0509	No feed	Note: Prior check point at no feed
J0501/J0502/J0503	Cassette no feed	Condition: No mark of paper feed at the paper leading edge and the cassette bottom plate does not rise.
J0501	Cassette no feed	Condition: No mark of paper feed at the paper leading edge and, the cassette bottom plate is rising but the paper feed drive does not start.
J0502/J0503	Cassette no feed	Condition: No mark of paper feed at the paper leading edge and, the cassette bottom plate is rising but the paper feed drive does not start.
J0501/J0502/J0503	Cassette no feed	Condition: Mark of paper feed slippage at the paper leading edge (the pickup roller cannot convey paper.)
J0501/J0502/J0503	Cassette no feed	Condition: A part other than the center part of the leading edge of the paper is broken. (Paper jam occurs as paper is caught up before entering the retard roller)
J0501/J0502/J0503	Cassette no feed	Condition: The center part of the paper leading edge is folded or torn (It does not reach to the retard roller or retard roller does not rotate).
J0501	Cassette no feed	Condition: The paper conveying force is lowered and paper slips.
J0502/J0503	Cassette no feed	Condition: The paper conveying force is lowered and paper slips.
J0501	Cassette no feed	Condition: The paper conveying force is lowered and paper slips or the roller does not rotate.
J0502/J0503	Cassette no feed	Condition: The paper conveying force is lowered and paper slips or the roller does not rotate.
J0501	Cassette no feed	Condition: The sensor detection is unstable.
J0502/J0503	Cassette no feed	Condition: The sensor detection is unstable.
J0508	No paper feed from the duplex section	Condition: Paper is damaged (Paper is caught up, the paper conveying force is lowered or paper slips).
J0508	No paper feed from the duplex section	Condition: Paper is not damaged (The duplex conveying drive does not rotate).
J0509	No paper feed from the MP tray	Condition: Paper is damaged (Paper is caught up, the paper conveying force is lowered or paper slips).
J0509	No paper feed from the MP tray	Condition: Paper is not damaged (The MP bottom plate does not ascend or feed drive does not start).
J0511	Multi feed jam	
J0512/J0513	Multi feed jam	
J0518	Multi-feeding from the duplex section	
J0519	Multi-feeding from the MP tray	
J1403	PF feed sensor non-arrival jam	Target: Paper feeder 2 Condition: Paper is not damaged (Paper feed does not start or the PF conveying clutch does not operate properly).
J1403	PF feed sensor non-arrival jam	Target: Paper feeder 2 Condition: Paper is damaged (Paper is caught up, the paper conveying force is lowered or paper slips).

Error code	Contents	note
J1413	PF feed sensor stay jam	Target: Paper feeder 2
J4002/J4003	Registration sensor non-arrival jam	Condition: Paper is damaged.
J4002/J4003	Registration sensor non-arrival jam	Condition: Paper is not damaged. (The PF conveying roller does not rotate properly. The PF conveying clutch does not operate properly.)
J4008	Registration sensor non-arrival jam	
J4012/J4013/J4018	Registration sensor stay jam	
J4201/J4202/J4203/ J4208/J4209	Exit sensor non-arrival jam	Condition: Paper jam before the fuser section
J4201/J4202/J4203/ J4208/J4209	Exit sensor non-arrival jam	Condition: Paper jam in the fuser section
J4201/J4202/J4203/ J4208/J4209	Exit sensor non-arrival jam	Condition: Paper rolled up on the fuser roller (leading edge margin less than 4.0mm)
J4201/J4202/J4203/ J4208/J4209	Exit sensor non-arrival jam	Condition: Paper rolled up on the fuser roller (leading edge margin 4.0mm or more)
J4201/J4202/J4203/ J4208/J4209	Exit sensor non-arrival jam	Condition: Paper jam after passing the lower exit roller
J4211/J4212/J4213/J4218/ J4219	Exit sensor stay jam	Condition: Paper jam in the fuser section
J4211/J4212/J4213/J4218/ J4219	Exit sensor stay jam	Condition: Paper jam in the exit unit
J4211/J4212/J4213/J4218/ J4219	Exit sensor stay jam	Condition: Paper jam at FD guide

Content of Jam Code

J0000: Power ON jam

The power was turned on while the unspecified conveying sensor turns on.

Step	Check description	Assumed cause	Measures	Reference
1	Checking the paper path	The paper is caught with a piece of paper, etc.	If there is a paper piece, foreign object or burr on the part such as guide and actuator on the conveying path, remove it.	
2	Cleaning the sensor	The sensor is dirty.	Clean the registration sensor or exit sensor.	
3	Checking the connection	The sensor is not properly connected.	Reconnect the connector to the registration sensor or exit sensor.	
4	Replacing the sensor	The sensor is faulty.	Replace the high voltage PWB (including the registration sensor) or fuser unit (including the exit sensor).	

J0101/J0104/J0105/J0106: Paper jam caused by the software factor

The firmware does not properly activate.

Step	Check description	Assumed cause	Measures	Reference
1	Resetting the main power	The controller does not activate properly.	Turn off the power switch and unplug the power cord. After 5s passes, reconnect the power cord and turn on the power switch.	
2	Firmware upgrade	The firmware does not properly activate.	Upgrade the firmware to the latest version.	

J0107: Fuser temperature stabilization time-out

The fuser temperature does not achieve to the paper feed-able temperature within the specified time.

Step	Check description	Assumed cause	Measures	Reference
1	Resetting the main power	The controller does not activate properly.	Turn off the power switch and unplug the power cord. After 5s passes, reconnect the power cord and turn on the power switch.	
2	Changing the external power source	The electric power supply fluctuates or the electric voltage reduces.	Plug the power cord into another wall outlet.	
3	Changing the settings	The actual paper and the paper settings (media type, paper size) do not match.	Select the proper media type in the system menu.	
4	Firmware upgrade	The firmware does not properly activate.	Upgrade the firmware to the latest version.	
5	Checking the fuser unit	The fuser heater is faulty.	Replace the fuser unit.	

J0110: Right cover open detection

Right cover open was detected during printing.

Step	Check description	Assumed cause	Measures	Reference
1	Checking the right cover	The right cover is not engaged.	Check if the right cover is securely closed and reattach it if necessary. If deformed, repair or replace it.	
2	Checking the interlock switch	The interlock switch does not operate properly.	Reattach the interlock switch and reconnect the connector. If not repaired, replace it.	

J0501/J0502/J0503/J0508/J0509: No feed

Note: Prior check point at no feed

During paper feed, the next sensor does not turn on even passing a certain time (paper factor).

Step	Check description	Assumed cause	Measures	Reference
1	Checking the paper	The cut-end of the paper is crushed.	Fan the paper well and load it by reversing the paper direction	
2	Checking the paper	The paper leading edge is bent.	Remove the bent paper.	
3	Checking the paper	Paper is curled downward or wavy.	Correct or replace paper. If difficult to replace, re-load paper by switching top and bottom ends or turning it over.	
4	Checking the paper	Unspecified papers are used.	Explain to the user to use the paper within the specifications.	
5	Checking the paper	foreign objects are on the paper.	Remove the paper with foreign objects.	

J0501/J0502/J0503: Cassette no feed

Condition: No mark of paper feed at the paper leading edge and the cassette bottom plate does not rise.

During paper feed from cassette 1-3, the leading edge does not come out from the cassette (no mark of paper feed at the leading edge).

Step	Check description	Assumed cause	Measures	Reference
1	Checking the spring	The spring is deformed and cannot lift up the cassette bottom plate.	Correct the spring if deformed. If not repaired, replace it.	
2	Replacing the cassette bottom plate	The cassette bottom plate is deformed or broken and cannot be lifted up.	Replace the cassette bottom plate.	

J0501: Cassette no feed

Condition: No mark of paper feed at the paper leading edge and, the cassette bottom plate is rising but the paper feed drive does not start.

During paper feed from cassette 1, the leading edge does not come out from the cassette (no mark of paper feed at the leading edge).

Step	Check description	Assumed cause	Measures	Reference
1	Checking the connection	The connector is not properly connected or the wire is faulty.	Clean the terminal of the following wire connectors and reconnect the connectors. If there is no continuity, replace the wire. • Feed clutch - Main/engine PWB (YC10) • Main motor - Main/engine PWB (YC9)	

Step	Check description	Assumed cause	Measures	Reference
2	Checking the paper feed shaft	The feed roller shaft or pin is not attached properly and feed roller does not rotate.	Reattach the feed shaft and feed pin. If deformed, replace them.	
3	Checking the driving parts	The main motor drive is not properly transmitted.	Check if the feed roller smoothly rotates manually and clean the drive parts and reattach them if necessary. If not repaired, replace them.	
4	Checking the paper feed clutch	The paper feed clutch is not connected, so the paper feed roller does not rotate.	Reattach the feed clutch and reconnect the connector. If not repaired, replace it.	
5	Checking the main motor	The main motor does not operate properly.	Reattach the main motor and reconnect the connector. If not repaired, replace it.	
6	Replacing the main/engine PWB	The main/engine PWB is faulty.	Replace the main/engine PWB.	

J0502/J0503: Cassette no feed

Condition: No mark of paper feed at the paper leading edge and, the cassette bottom plate is rising but the paper feed drive does not start.

During paper feed from cassette 2,3, the leading edge does not come out from the cassette (no mark of paper feed at the leading edge).

Step	Check description	Assumed cause	Measures	Reference
1	Checking the connection	The connector is not properly connected or the wire is faulty.	Clean the terminal of the following wire connectors and reconnect the connectors. If there is no continuity, replace the wire. • PF feed clutch - PF main PWB (YC2) • PF feed motor - PF main PWB (YC4) • PF main PWB (YC5)(PF2) - Drawer connector (at J0503 jam) • Drawer connector - PF main PWB (YC6)(PF1) (at J0503 jam) • PF main PWB (YC5)(PF1) - Drawer connector • Drawer connector - Main/engine PWB (YC17)	
2	Checking the paper feed shaft	The PF feed roller shaft or pin is not attached properly and PF feed roller does not rotate.	Reattach the feed shaft and feed pin. If deformed, replace them.	
3	Checking the driving parts	The PF feed motor drive is not transmitted properly.	Check if the PF feed roller smoothly rotates manually and clean the drive parts and reattach them if necessary. If not repaired, replace them.	

Step	Check description	Assumed cause	Measures	Reference
4	Checking the PF feed clutch	The PF feed clutch is not linked and the PF feed roller does not rotate.	Reattach the PF feed clutch and reconnect the connector. If not repaired, replace it.	
5	Checking the PF feed motor	The PF feed motor does not operate properly.	Reattach the PF feed motor and reconnect the connector. If not repaired, replace it.	
6	Replacing the PF main PWB	The PF main PWB is faulty.	Replace the PF main PWB.	
7	Replacing the main/engine PWB	The main/engine PWB is faulty.	Replace the main/engine PWB.	

J0501/J0502/J0503: Cassette no feed

Condition: Mark of paper feed slippage at the paper leading edge (the pickup roller cannot convey paper.)

When feeding from cassette 1-3, paper stops at the pickup roller and the next sensor does not turn on after the feed clutch or PF feed clutch turns on.

Step	Check description	Assumed cause	Measures	Reference
1	Relocating the paper width guides	The locations of the paper width guides do not fit with the paper size.	Relocate the paper width guides to fit them with the paper size.	
2	Checking the pickup roller	The conveying function of the pickup roller is not enough.	Clean the pickup roller surface. If worn down, replace it.	
3	Checking the paper feed roller	The conveying function of the paper feed roller is not enough.	Clean the feed roller surface. If worn down, replace it.	

J0501/J0502/J0503: Cassette no feed

Condition: A part other than the center part of the leading edge of the paper is broken. (Paper jam occurs as paper is caught up before entering the retard roller)

When feeding from cassette 1-3, paper stops at the feed roller and the next sensor does not turn on after the feed clutch or PF feed clutch turns on.

Step	Check description	Assumed cause	Measures	Reference
1	Checking the paper	Paper curls downward.	Correct or replace paper. If difficult to replace, re-load paper by switching top and bottom ends or turning it over.	
2	(In case paper is bent or conveyed in skew) Checking the conveying path	Paper is caught up by the conveying guide or paper piece.	If there is a paper piece or foreign object on the conveying side or a burr on the conveying side of the conveying guide or on the parts such as actuator, remove it or replace it. If there is a scratch, deformation or floating on the sheet or film, correct or replace it.	

J0501/J0502/J0503: Cassette no feed

Condition: The center part of the paper leading edge is folded or torn (It does not reach to the retard roller or retard roller does not rotate).

When feeding from cassette 1-3, paper stops at the retard roller and the next sensor does not turn on after the feed clutch or PF feed clutch turns on.

Step	Check description	Assumed cause	Measures	Reference
1	Checking the retard roller	The retard roller conveying force is not enough.	Clean the retard roller surface. If worn down, replace it.	
2	Reattaching the retard spring	The retard spring comes off.	Reattach the retard spring.	
3	(In case paper is bent or conveyed in skew) Checking the conveying path	Paper is caught up by the conveying guide or paper piece.	If there is a paper piece or foreign object on the conveying side or a burr on the conveying side of the conveying guide or on the parts such as actuator, remove it or replace it. If there is a scratch, deformation or floating on the sheet or film, correct or replace it.	

J0501: Cassette no feed

Condition: The paper conveying force is lowered and paper slips.

When feeding from cassette1, the paper leading edge gets out of cassette but does not reach the middle roller after the feed clutch turns on.

Step	Check description	Assumed cause	Measures	Reference
1	Checking the retard roller	The conveying performance is lowered due to the retard roller rotation failure.	Clean the retard roller surface. If worn down, replace it.	
2	Checking the retard holder	The load increases since the retard holder is caught up.	Reattach the retard holder. If not repaired, replace it.	
3	Checking the paper feed roller	The conveying function of the paper feed roller is not enough.	Clean the paper feed roller surface. If worn down, replace it.	
4	(When the paper skew occurs) Relocating the paper width guides	The locations of the paper width guides do not fit with the paper size.	Relocate the paper width guides to fit them with the paper size.	
5	(In case paper is conveyed in skew) Checking the paper stacking level	Paper is loaded above the highest level.	Reload paper up to the paper stack limit label level.	

J0502/J0503: Cassette no feed

Condition: The paper conveying force is lowered and paper slips.

When feeding from cassette 2,3, the paper leading edge gets out of cassette but does not reach the PF conveying roller after the PF feed clutch turns on.

Step	Check description	Assumed cause	Measures	Reference
1	Checking the retard roller	The conveying performance is lowered due to the retard roller rotation failure.	Clean the retard roller surface. If worn down, replace it.	
2	Checking the retard holder	The load increases since the retard holder is caught up.	Reattach the retard holder. If not repaired, replace it.	
3	Checking the paper feed roller	The conveying function of the paper feed roller is not enough.	Clean the paper feed roller surface. If worn down, replace it.	
4	Checking the connection	The connector is not properly connected or the wire is faulty.	Clean the terminal of the following wire connectors and reconnect the connectors. If there is no continuity, replace the wire. • PF conveying clutch - PF main PWB(YC2) • PF main PWB (YC5)(PF2) - Drawer connector (at J0503 jam) • Drawer connector - PF main PWB (YC6)(PF1) (at J0503 jam) • PF main PWB (YC5)(PF1) - Drawer connector • Drawer connector - Main/engine PWB (YC17)	
5	Checking the PF conveying clutch	The PF conveying clutch does not operate properly.	Reattach the PF feed clutch and reconnect the connector. If not repaired, replace it.	
6	Replacing the PF main PWB	The PF main PWB is faulty.	Replace the PF main PWB.	
7	Replacing the main/engine PWB	The main/engine PWB is faulty.	Replace the main/engine PWB.	

J0501: Cassette no feed

Condition: The paper conveying force is lowered and paper slips or the roller does not rotate.

When feeding from cassette 1, the paper leading edge gets out of cassette but stops at the middle roller after the feed clutch turns on.

Step	Check description	Assumed cause	Measures	Reference
1	Checking the paper feed roller	The conveying function of the paper feed roller is not enough.	Clean the paper feed roller surface. If worn down, replace it.	

Step	Check description	Assumed cause	Measures	Reference
2	Checking the middle roller and middle pulley	The middle roller conveying force is not enough.	Clean the middle roller and middle pulley on their surface. If the spring and bushing come off, reattach them. If the roller and pulley are deformed or worn down, replace them.	
3	Checking the driving parts	The main motor drive is not properly transmitted.	Check if the middle roller smoothly rotate manually, clean the drive parts and reattach them if necessary. If not repaired, replace them.	
4	(When the paper skew occurs) Relocating the paper width guides	The locations of the paper width guides do not fit with the paper size.	Relocate the paper width guides to fit them with the paper size.	
5	(In case paper is conveyed in skew) Checking the paper stacking level	Paper is loaded above the highest level.	Reload paper within the upper limit label level.	
6	(In case paper is bent or conveyed in skew) Checking the conveying path	Paper is caught up by the conveying guide or paper piece.	If there is a paper piece or foreign object on the conveying side or a burr on the conveying side of the conveying guide or on the parts such as actuator, remove it or replace it. If there is a scratch, deformation or floating on the sheet or film, correct or replace it.	
7	Checking the connection	The connector is not properly connected or the wire is faulty.	Clean the terminal of the following wire connectors and reconnect the connectors. If there is no continuity, replace the wire. • Main motor - Main/engine PWB (YC9)	
8	Checking the main motor	The main motor does not operate properly.	Reattach the main motor and reconnect the connector. If not repaired, replace it.	
9	Replacing the main/engine PWB	The main/engine PWB is faulty.	Replace the main/engine PWB.	

J0502/J0503: Cassette no feed

Condition: The paper conveying force is lowered and paper slips or the roller does not rotate.

When feeding from cassette 2,3, the paper leading edge gets out of cassette but stops at the PF conveying roller after the PF feed clutch turns on.

Step	Check description	Assumed cause	Measures	Reference
1	Checking the paper feed roller	The conveying function of the paper feed roller is not enough.	Clean the paper feed roller surface. If worn down, replace it.	
2	Checking the PF conveying roller and PF conveying pulley	The PF conveying roller conveying force is not enough.	Clean the PF conveying roller and PF conveying pulley on their surface. If the spring and bushing come off, reattach them. If the roller and pulley are deformed or worn down, replace them.	

Step	Check description	Assumed cause	Measures	Reference
3	Checking the driving parts	The PF feed motor drive is not transmitted properly.	Check if the PF conveying roller smoothly rotates manually. Clean the drive parts and reattach them if necessary. If not repaired, replace them.	
4	(When the paper skew occurs) Relocating the paper width guides	The locations of the paper width guides do not fit with the paper size.	Relocate the paper width guides to fit them with the paper size.	
5	(In case paper is conveyed in skew) Checking the paper stacking level	Paper is loaded above the highest level.	Reload paper within the upper limit label level.	
6	(In case paper is bent or conveyed in skew) Checking the conveying path	Paper is caught up by the conveying guide or paper piece.	If there is a paper piece or foreign object on the conveying side or a burr on the conveying side of the conveying guide or on the parts such as actuator, remove it or replace it. If there is a scratch, deformation or floating on the sheet or film, correct or replace it.	
7	Checking the connection	The connector is not properly connected or the wire is faulty.	Clean the terminal of the following wire connectors and reconnect the connectors. If there is no continuity, replace the wire. • PF conveying clutch - PF main PWB(YC2) • PF feed motor - PF main PWB(YC4) • PF main PWB (YC5)(PF2) - Drawer connector (at J0503 jam) • Drawer connector - PF main PWB (YC6)(PF1) (at J0503 jam) • PF main PWB (YC5)(PF1) - Drawer connector • Drawer connector - Main/engine PWB (YC17)	
8	Checking the PF conveying clutch	The PF conveying clutch does not operate properly.	Reattach the PF feed clutch and reconnect the connector. If not repaired, replace it.	
9	Checking the PF feed motor	The PF feed motor does not operate properly.	Reattach the PF feed motor and reconnect the connector. If not repaired, replace it.	
10	Replacing the PF main PWB	The PF main PWB is faulty.	Replace the PF main PWB.	
11	Replacing the main/engine PWB	The main/engine PWB is faulty.	Replace the main/engine PWB.	

J0501: Cassette no feed

Condition: The sensor detection is unstable.

When feeding from cassette 1, the paper leading edge reaches the registration sensor but it does not turn on after the feed clutch turns on.

Step	Check description	Assumed cause	Measures	Reference
1	Checking the connection	The connector is not properly connected or the wire is faulty.	Clean the terminal of the following wire connectors and reconnect the connectors. If there is no continuity, replace the wire. • Registration sensor (on the high voltage PWB) - Main/engine PWB (YC16)	
2	Checking the registration sensor	The registration sensor does not operate properly.	Clean the registration sensor and reconnect the connector. If not repaired, replace the high voltage PWB (including the registration sensor).	
3	Replacing the main/engine PWB	The main/engine PWB is faulty.	Replace the main/engine PWB.	

J0502/J0503: Cassette no feed

Condition: The sensor detection is unstable.

When feeding from cassette 2,3, the paper leading edge reaches the PF feed sensor but it does not turn on after the PF feed clutch turns on.

Step	Check description	Assumed cause	Measures	Reference
1	Checking the connection	The connector is not properly connected or the wire is faulty.	Clean the terminal of the following wire connectors and reconnect the connectors. If there is no continuity, replace the wire. • PF feed sensor - PF main PWB (YC7) • PF main PWB (YC5)(PF2) - Drawer connector (at J0503 jam) • Drawer connector - PF main PWB (YC6)(PF1) (at J0503 jam) • PF main PWB (YC5)(PF1) - Drawer connector • Drawer connector - Main/engine PWB (YC17)	
2	Checking the PF feed sensor	The PF feed sensor does not operate properly.	Reattach the PF feed sensor and reconnect the connector. If not repaired, replace it.	
3	Replacing the PF main PWB	The PF main PWB is faulty.	Replace the PF main PWB.	
4	Replacing the main/engine PWB	The main/engine PWB is faulty.	Replace the main/engine PWB.	

J0508: No paper feed from the duplex section

Condition: Paper is damaged (Paper is caught up, the paper conveying force is lowered or paper slips).

When feeding from duplex section, the registration sensor does not turn on after the exit solenoid turns on (after paper switches back).

Step	Check description	Assumed cause	Measures	Reference
1	Performing the prior standard check items	There is a mechanical cause such as the dirty guide, etc.	Perform the prior standard check items.	
2	(In case paper is bent or conveyed in skew) Checking the conveying path	Paper is caught up by the conveying guide or paper piece.	If there is a paper piece or foreign object on the conveying side or a burr on the conveying side of the conveying guide or on the parts such as actuator, remove it or replace it. If there is a scratch, deformation or floating on the sheet or film, correct or replace it.	
3	(In case paper leading edge is bent) Checking paper	The paper curls or is wavy.	Replace the paper if it is damp.	
4	(In case paper slips and stops at the DU conveying roller) Checking paper	Unspecified papers are used.	Explain to the user to use the paper within the specifications.	
5	(In case paper stops at the DU conveying roller) Checking the DU conveying roller and pulley	The conveying performance is lowered or slippage occurs (rotation not smooth).	Clean the DU conveying roller and DU conveying pulley on their surface. Check the pressure to the roller and pulley and if the spring and bushing come off, reattach them. If the roller and pulley are deformed or worn down, replace them. If foreign objects adhere to the drive gear, remove them. If damaged, replace it.	
6	Checking the actuator and the spring	The actuator does not operate properly.	Reattach the actuator and spring for the registration sensor. If not operating properly due to deformation, correct or replace it.	

J0508: No paper feed from the duplex section

Condition: Paper is not damaged (The duplex conveying drive does not rotate).

When feeding from duplex section, the registration sensor does not turn on after the exit solenoid turns on (after paper switches back).

Step	Check description	Assumed cause	Measures	Reference
1	(In case paper stops at the DU conveying roller) Checking the drive parts	The main motor drive is not properly transmitted.	Check if the DU conveying roller A, B smoothly rotate manually, clean the drive parts and reattach them if necessary. If not repaired, replace them.	

Step	Check description	Assumed cause	Measures	Reference
2	Checking the connection	The connector is not properly connected or the wire is faulty.	Clean the terminal of the following wire connectors and reconnect the connectors. If there is no continuity, replace the wire. • Registration sensor (on the high voltage PWB) - Main/engine PWB (YC16) • Main motor - Main/engine PWB (YC9)	
3	Checking the registration sensor	The registration sensor does not operate properly.	Clean the registration sensor and reconnect the connector. If not repaired, replace the high voltage PWB (including the registration sensor).	
4	Checking the main motor	The main motor does not operate properly.	Reattach the main motor and reconnect the connector. If not repaired, replace it.	
5	Replacing the main/engine PWB	The main/engine PWB is faulty.	Replace the main/engine PWB.	

J0509: No paper feed from the MP tray

Condition: Paper is damaged (Paper is caught up, the paper conveying force is lowered or paper slips).

The registration sensor does not turn on during paper feed from the MP tray.

Step	Check description	Assumed cause	Measures	Reference
1	(In case paper leading edge is bent) Checking paper	The paper leading edge is bent.	Remove the bent paper.	
2	(In case paper leading edge is bent) Checking paper	Paper is curled downward or wavy.	Correct or replace paper. If difficult to replace, re-load paper by switching top and bottom ends or turning it over.	
3	(In case paper leading edge is bent) Checking paper	foreign objects are on the paper.	Remove the paper with foreign objects.	
4	(In case paper is bent or conveyed in skew) Checking the conveying path	Paper is caught up by the conveying guide or paper piece.	If there is a paper piece or foreign object on the conveying side or a burr on the conveying side of the conveying guide or on the parts such as actuator, remove it or replace it. If there is a scratch, deformation or floating on the sheet or film, correct or replace it.	
5	(In case paper stops at the MP feed roller) Checking paper	The cut-end of the paper is crushed.	Fan the paper well and load it by reversing the paper direction	
6	(In case paper stops at the MP feed roller) Checking paper	Unspecified papers are used.	Explain to the user to use the paper within the specifications.	
7	(In case paper stops at the MP feed roller) Checking the MP feed roller	The paper conveying performance of the MP feed roller is not enough.	Clean the MP paper feed roller surface. If worn down, replace it.	

Step	Check description	Assumed cause	Measures	Reference
8	Checking the actuator and the spring	The actuator does not operate properly.	Correct and reattach the registration sensor actuator if does not operate properly due to deformation, etc. If not repaired, replace it.	

J0509: No paper feed from the MP tray

Condition: Paper is not damaged (The MP bottom plate does not ascend or feed drive does not start).

The registration sensor does not turn on during paper feed from the MP tray.

Step	Check description	Assumed cause	Measures	Reference
1	(In case the MP bottom plate does not ascend) Checking the cam	The cam to lift up the MP bottom plate does not operate properly.	Align the MP bottom plate elevation cam and reattach it.	
2	(In case the MP bottom plate does not ascend) Checking the MP bottom plate	The MP bottom plate is not properly attached.	Reattach the MP bottom plate.	
3	(In case the MP bottom plate does not ascend) Checking the MP solenoid	The MP solenoid does not operate properly.	Reattach the MP solenoid and reconnect the connector. If not repaired, replace it.	
4	(In case paper stops at the MP feed roller) Checking the drive parts	The main motor drive is not properly transmitted.	Check if the MP feed roller smoothly rotates manually and clean and reattach the drive parts if necessary. If not repaired, replace it.	
5	Checking the actuator and the spring	The actuator does not operate properly.	Correct and reattach the registration sensor actuator if does not operate properly due to deformation, etc. If not repaired, replace it.	
6	Checking the connection	The connector is not properly connected or the wire is faulty.	Clean the terminal of the following wire connectors and reconnect the connectors. If there is no continuity, replace the wire. • Registration sensor (on the high voltage PWB) - Main/engine PWB (YC16) • Main motor - Main/engine PWB (YC9)	
7	Checking the registration sensor	The registration sensor does not operate properly.	Clean the registration sensor and reconnect the connector. If not repaired, replace the high voltage PWB (including the registration sensor).	
8	Checking the main motor	The main motor does not operate properly.	Reattach the main motor and reconnect the connector. If not repaired, replace it.	
9	Replacing the main/engine PWB	The main/engine PWB is faulty.	Replace the main/engine PWB.	

J0511: Multi feed jam

When feeding cassette 1, the registration sensor does not turn on even passing certain time after the registration clutch turns on.

Step	Check description	Assumed cause	Measures	Reference
1	Checking the paper	The cut-end of the paper is crushed.	Fan the paper well and load it by reversing the paper direction	
2	Checking the paper	The paper leading edge is bent.	Remove the bent paper.	
3	Checking the paper	foreign objects are on the paper.	Remove the paper with foreign objects.	
4	Replacing the paper	The paper is damp.	Replace the paper.	
5	Checking the retard roller	The paper separation force of the retard roller is not enough.	Clean the retard roller surface. If worn down, replace it.	
6	Checking the retard holder	The retard holder comes off.	Reattach the retard holder.	
7	Checking the retard spring	The retard spring comes off.	Reattach the retard spring.	
8	Checking the connection	The connector is not properly connected or the wire is faulty.	Clean the terminal of the following wire connectors and reconnect the connectors. If there is no continuity, replace the wire. • Registration clutch - Main/engine PWB (YC10) • Registration sensor (on the high voltage PWB) - Main/engine PWB (YC16) • Feed clutch - Main/engine PWB (YC10)	
9	(In case of no mark of paper loop) Checking the registration clutch	The registration clutch continues linkage and the registration roller rotation does not stop.	Reattach the registration clutch and reconnect the connector. If not repaired, replace it.	
10	Checking the registration sensor	The registration sensor does not operate properly.	Clean the registration sensor and reconnect the connector. If not repaired, replace the high voltage PWB (including the registration sensor).	
11	Checking the paper feed clutch	The feed clutch does not operate properly.	Reattach the feed clutch and reconnect the connector. If not repaired, replace it.	
12	Replacing the main/engine PWB	The main/engine PWB is faulty.	Replace the main/engine PWB.	

J0512/J0513: Multi feed jam

When feeding from cassette 2,3, the PF feed sensor does not turn off even passing certain time after the PF feed sensor turns on.

Step	Check description	Assumed cause	Measures	Reference
1	Checking the paper	The cut-end of the paper is crushed.	Fan the paper well and load it by reversing the paper direction	

Step	Check description	Assumed cause	Measures	Reference
2	Checking the paper	The paper leading edge is bent.	Remove the bent paper.	
3	Checking the paper	foreign objects are on the paper.	Remove the paper with foreign objects.	
4	Replacing the paper	The paper is damp.	Replace the paper.	
5	Checking the retard roller	The paper separation force of the retard roller is not enough.	Clean the retard roller surface. If worn down, replace it.	
6	Checking the retard holder	The retard holder comes off.	Reattach the retard holder.	
7	Checking the retard spring	The retard spring comes off.	Reattach the retard spring.	
8	Checking the connection	The connector is not properly connected or the wire is faulty.	Clean the terminal of the following wire connectors and reconnect the connectors. If there is no continuity, replace the wire. • PF conveying clutch - PF main PWB (YC2) • PF feed sensor - PF main PWB (YC7) • PF feed clutch - PF main PWB (YC2) • PF main PWB (YC5)(PF2) - Drawer connector (at J0513 jam) • Drawer connector - PF main PWB (YC6)(PF1) • PF main PWB (YC5)(PF1) - Drawer connector • Drawer connector - Main/engine PWB (YC17)	
9	(In case of no mark of paper loop) Checking the PF conveying clutch	The PF conveying clutch continues linkage and the PF conveying roller rotation does not stop.	Reattach the PF feed clutch and reconnect the connector. If not repaired, replace it.	
10	Checking the PF feed sensor	The PF feed sensor does not operate properly.	Reattach the PF feed sensor and reconnect the connector. If not repaired, replace it.	
11	Checking the PF feed clutch	The PF conveying clutch does not operate properly.	Reattach the PF feed clutch and reconnect the connector. If not repaired, replace it.	
12	Replacing the PF main PWB	The PF main PWB is faulty.	Replace the PF main PWB.	
13	Replacing the main/engine PWB	The main/engine PWB is faulty.	Replace the main/engine PWB.	

J0518: Multi-feeding from the duplex section

When feeding from duplex, the registration sensor does not turn off even passing certain time after the registration clutch turns on.

Step	Check description	Assumed cause	Measures	Reference
1	Checking the paper	The cut-end of the paper is crushed.	Fan the paper well and load it by reversing the paper direction	
2	Checking the paper	The paper leading edge is bent.	Remove the bent paper.	
3	Checking the paper	foreign objects are on the paper.	Remove the paper with foreign objects.	
4	Checking the paper	Paper is wavy with moisture or curled.	Correct or replace paper. If difficult to replace, re-load paper by switching top and bottom ends or turning it over.	
5	Checking the connection	The connector is not properly connected or the wire is faulty.	Clean the terminal of the following wire connectors and reconnect the connectors. If there is no continuity, replace the wire. • Registration clutch - Main/engine PWB (YC10) • Registration sensor (on the high voltage PWB) - Main/engine PWB (YC16)	
6	(In case paper reached the registration roller but no mark of paper loop) Checking the registration clutch	The registration clutch continues linkage and the registration roller rotation does not stop.	Reattach the registration clutch and reconnect the connector. If not repaired, replace it.	
7	Checking the registration sensor	The registration sensor does not operate properly.	Clean the registration sensor and reconnect the connector. If not repaired, replace the high voltage PWB (including the registration sensor).	
8	Replacing the main/engine PWB	The main/engine PWB is faulty.	Replace the main/engine PWB.	

J0519: Multi-feeding from the MP tray

When feeding from MP tray, the registration sensor does not turn off even passing certain time after the registration clutch turns on.

Step	Check description	Assumed cause	Measures	Reference
1	Checking the paper	The cut-end of the paper is crushed.	Fan the paper well and load it by reversing the paper direction	
2	Checking the paper	The paper leading edge is bent.	Remove the bent paper.	
3	Checking the paper	foreign objects are on the paper.	Remove the paper with foreign objects.	
4	Checking the paper	The paper is curled or wavy.	Correct or replace paper. If difficult to replace, re-load paper by switching top and bottom ends or turning it over.	

Step	Check description	Assumed cause	Measures	Reference
5	Checking the MP feed roller and the MP separation pad	The paper separation force of the MP separation pad is insufficient.	Clean the MP feed roller and MP separation pad on their surface or replace them.	
6	Checking the actuator and the spring	The actuator does not operate properly.	Correct and reattach the registration sensor actuator if does not operate properly due to deformation, etc. If not repaired, replace it.	
7	Checking the connection	The connector is not properly connected or the wire is faulty.	Clean the terminal of the following wire connectors and reconnect the connectors. If there is no continuity, replace the wire. • Registration sensor (on the high voltage PWB) - Main/engine PWB (YC16) • Registration clutch - Main/engine PWB (YC10)	
8	(In case paper reached the registration roller but no mark of paper loop) Checking the registration clutch	The registration clutch continues linkage and the registration roller rotation does not stop.	Reattach the registration clutch and reconnect the connector. If not repaired, replace it.	
9	Checking the registration sensor	The registration sensor does not operate properly.	Clean the registration sensor and reconnect the connector. If not repaired, replace the high voltage PWB (including the registration sensor).	
10	Replacing the main/engine PWB	The main/engine PWB is faulty.	Replace the main/engine PWB.	

J1403: PF feed sensor non-arrival jam

Target: Paper feeder 2

Condition: Paper is not damaged (Paper feed does not start or the PF conveying clutch does not operate properly).

The PF feed sensor (PF1) does not turn on even passing certain tie after the PF feed sensor (PF2) turns on.

Step	Check description	Assumed cause	Measures	Reference
1	(In case the leading edge of paper stops at the paper feeder 1 PF conveying roller) Checking the drive parts	The PF feed motor drive is not transmitted properly.	Check if the PF conveying roller smoothly rotates manually. Clean the drive parts and reattach them if necessary. If not repaired, replace them.	

Step	Check description	Assumed cause	Measures	Reference
2	Checking the connection	The connector is not properly connected or the wire is faulty.	Clean the terminal of the following wire connectors and reconnect the connectors. If there is no continuity, replace the wire. • PF feed sensor (PF1) - PF main PWB (YC7) • PF conveying clutch (PF1) - PF main PWB (YC2)• PF feed motor (PF1) - PF main PWB (YC4) • PF main PWB (YC5)(PF1) - Drawer connector • Drawer connector - Main/engine PWB (YC17)	
3	Checking the PF feed sensor	The PF feed sensor does not operate properly.	Clean the PF feed sensor, reattach it and reconnect the connector. If not repaired, replace it. (Paper feeder 1)	
4	Checking the PF conveying clutch	The PF conveying clutch does not operate properly.	Clean the PF feed clutch, reattach it and reconnect the connector. If not repaired, replace it. (Paper feeder 1)	
5	Checking the PF feed motor	The PF feed motor does not operate properly.	Clean the PF feed motor, reattach it and reconnect the connector. If not repaired, replace it. (Paper feeder 1)	
6	Replacing the PF main PWB	The PF main PWB is faulty.	Replace the PF main PWB. (Paper feeder 1)	
7	Replacing the main/engine PWB	The main/engine PWB is faulty.	Replace the main/engine PWB.	

J1403: PF feed sensor non-arrival jam

Target: Paper feeder 2

Condition: Paper is damaged (Paper is caught up, the paper conveying force is lowered or paper slips).

The PF feed sensor (PF1) does not turn on even passing certain tie after the PF feed sensor (PF2) turns on.

Step	Check description	Assumed cause	Measures	Reference
1	(In case paper is bent or conveyed in skew) Checking the conveying path	Paper is caught up by the conveying guide or paper piece.	If there is a paper piece or foreign object on the conveying side or a burr on the conveying side of the conveying guide or on the parts such as actuator, remove it or replace it. If there is a scratch, deformation or floating on the sheet or film, correct or replace it.	
2	(When the paper skew occurs) Relocating the paper width guides	The locations of the paper width guides do not fit with the paper size.	Relocate the paper width guides to fit them with the paper size.	
3	(In case paper is conveyed in skew) Checking the press spring	The PF feed roller pressure balance is not proper.	Reattach the PF feed roller press spring. If deformed, correct or replace it.	

Step	Check description	Assumed cause	Measures	Reference
4	(In case paper is conveyed in skew or in delay) Checking the PF feed roller and conveying gear	The conveying performance is lowered or slippage occurs (rotation not smooth).	Clean the PF feed roller surface. If worn down, replace it. If foreign objects adhere to the drive gear, remove it. If damaged, replace it.	
5	Checking the paper	The cut-end of the paper is crushed.	Fan the paper well and load it by reversing the paper direction	
6	Checking the paper	The paper leading edge is bent.	Remove the bent paper.	
7	Checking the paper	Paper is curled downward or wavy.	Correct or replace paper. If difficult to replace, re-load paper by switching top and bottom ends or turning it over.	
8	Checking the paper	foreign objects are on the paper.	Remove the paper with foreign objects.	
9	(In case paper slips) Checking paper	Unspecified papers are used.	Explain to the user to use the paper within the specifications.	

J1413: PF feed sensor stay jam

Target: Paper feeder 2

The PF feed sensor (PF1) does not turn off even passing certain tie after the PF feed sensor (PF2) turns off.

Step	Check description	Assumed cause	Measures	Reference
1	(In case paper is bent or conveyed in skew) Checking the conveying path	Paper is caught up by the conveying guide or paper piece.	If there is a paper piece or foreign object on the conveying side or a burr on the conveying side of the conveying guide or on the parts such as actuator, remove it or replace it. If there is a scratch, deformation or floating on the sheet or film, correct or replace it.	
2	(When the paper skew occurs) Relocating the paper width guides	The locations of the paper width guides do not fit with the paper size.	Relocate the paper width guides to fit them with the paper size.	
3	(In case paper is conveyed in skew) Checking the paper stacking level	Paper is loaded above the highest level.	Reload paper within the upper limit label level.	
4	(In case paper is conveyed in skew) Checking the press spring	The front/rear PF feed roller pressure balance is not proper.	Reattach the PF feed roller press spring. If deformed, correct or replace it.	
5	(In case paper skews) Checking the conveying guide	The paper is caught with the conveying guide.	Reattach the conveying guide. If there is a burr on the conveying side of the conveying guide, remove it or replace the conveying guide.	
6	Checking the PF feed roller and drive gear	The conveying performance is lowered or slippage occurs (rotation not smooth).	Clean the PF feed roller surface. If worn down, replace it. If foreign objects adhere to the drive gear, remove them and if damaged, replace it.	

Step	Check description	Assumed cause	Measures	Reference
7	Checking the PF cover	The PF cover is deformed.	Check if the PF cover is closed securely. If not closed due to deformation, replace it.	
8	Checking the paper	The cut-end of the paper is crushed.	Fan the paper well and load it by reversing the paper direction	
9	Checking the paper	The paper leading edge is bent.	Remove the bent paper.	
10	Checking the paper	Paper is curled downward or wavy.	Correct or replace paper. If difficult to replace, re-load paper by switching top and bottom ends or turning it over.	
11	Checking the paper	Unspecified papers are used.	Explain to the user to use the paper within the specifications.	
12	Checking the paper	foreign objects are on the paper.	Remove the paper with foreign objects.	
13	Checking the connection	The connector is not properly connected or the wire is faulty.	Clean the terminal of the following wire connectors and reconnect the connectors. If there is no continuity, replace the wire. • PF feed sensor (PF1) - PF main PWB (YC7) • PF main PWB (YC5)(PF1) - Drawer connector • Drawer connector - Main/engine PWB (YC17)	
14	Checking the PF feed sensor	The PF feed sensor does not operate properly.	Clean the PF feed sensor, reattach it and reconnect the connector. If not repaired, replace it. (Paper feeder 1)	
15	Replacing the PF main PWB	The PF main PWB is faulty.	Replace the PF main PWB. (Paper feeder 1)	
16	Replacing the main/engine PWB	The main/engine PWB is faulty.	Replace the main/engine PWB.	

J4002/J4003: Registration sensor non-arrival jam

Condition: Paper is damaged.

The registration sensor does not turn on when feed from cassette 2, 3.

Step	Check description	Assumed cause	Measures	Reference
1	(There is a mark of paper caught up or paper is conveyed in skew) Checking the paper path	Paper is caught up at the foreign objects, hole, burr, etc. on the conveying side of the conveying guide.	If there is a foreign object or burr on the conveying side of the conveying guide, remove it or replace it. If there is a scratch, deformation or floating, on the sheet guide material correct or replace it.	
2	(In case of Z-folded paper) Checking the paper conveying path	The conveying path is filled with foreign objects such as paper piece.	If there is a burr or foreign object on the conveying side of the conveying guide, remove it. If broken, replace the conveying guide.	

Step	Check description	Assumed cause	Measures	Reference
3	(Paper is conveyed in skew or paper has a Z-fold) Checking the PF conveying roller and drive gear	The conveying performance is lowered or slippage occurs (rotation not smooth).	Clean the PF conveying roller surface. If worn down, replace it. If foreign objects adhere to the drive gear, remove them and if damaged, replace it.	
4	(When the paper skew occurs) Relocating the paper width guides	The locations of the paper width guides do not fit with the paper size.	Relocate the paper width guides to fit them with the paper size.	
5	(In case paper is conveyed in skew) Checking the paper stacking level	Paper is loaded above the highest level.	Reload paper within the upper limit label level.	
6	(In case paper is conveyed in skew) Checking the press spring	Pressure balance of the PF conveying pulley is not proper.	Reattach the PF conveying pulley press spring. If deformed, correct or replace it.	
7	(In case paper conveying delays) Checking the PF cover	The PF cover is deformed.	Check if the PF cover is closed securely. If not closed due to deformation, replace it.	
8	(In case paper leading edge is bent) Checking paper	The paper leading edge is bent.	Remove the bent paper.	
9	(In case paper leading edge is bent) Checking paper	Paper is curled downward or wavy.	Correct or replace paper. If difficult to replace, re-load paper by switching top and bottom ends or turning it over.	
10	(In case paper leading edge is bent) Checking paper	foreign objects are on the paper.	Remove the paper with foreign objects.	
11	Checking the connection	The connector is not properly connected or the wire is faulty.	Clean the terminal of the following wire connectors and reconnect the connectors. If there is no continuity, replace the wire. • Registration sensor (on the high voltage PWB) - Main/engine PWB (YC16)	
12	Checking the registration sensor	The registration sensor does not operate properly.	Clean the registration sensor and reconnect the connector. If not repaired, replace the high voltage PWB (including the registration sensor).	
13	Replacing the main/engine PWB	The main/engine PWB is faulty.	Replace the main/engine PWB.	

J4002/J4003: Registration sensor non-arrival jam

Condition: Paper is not damaged. (The PF conveying roller does not rotate properly. The PF conveying clutch does not operate properly.)

The registration sensor does not turn on when feed from cassette 2, 3.

Step	Check description	Assumed cause	Measures	Reference
1	(In case paper stops at the PF conveying roller) Checking the drive parts	The PF feed motor drive is not transmitted properly.	Check if the PF conveying roller smoothly rotates manually. Clean the drive parts and reattach them if necessary. If not repaired, replace them.	
2	Checking the connection	The connector is not properly connected or the wire is faulty.	Clean the terminal of the following wire connectors and reconnect the connectors. If there is no continuity, replace the wire. • Registration sensor (on the high voltage PWB) - Main/engine PWB (YC16) • PF conveying clutch - PF main PWB (YC2) • PF feed motor - PF main PWB (YC4) • PF main PWB (YC5)(PF2) - Drawer connector (at J4003 jam) • Drawer connector - PF main PWB (YC6)(PF1) (at J4003 jam) • PF main PWB (YC5)(PF1) - Drawer connector • Drawer connector - Main/engine PWB (YC17)	
3	Checking the PF conveying clutch	The PF conveying clutch does not operate properly.	Reattach the PF feed clutch and reconnect the connector. If not repaired, replace it.	
4	Checking the PF feed motor	The PF feed motor does not operate properly.	Reattach the PF feed motor and reconnect the connector. If not repaired, replace it.	
5	Checking the registration sensor	The registration sensor does not operate properly.	Clean the registration sensor and reconnect the connector. If not repaired, replace the high voltage PWB (including the registration sensor).	
6	Replacing the PF main PWB	The PF main PWB is faulty.	Replace the PF main PWB.	
7	Replacing the main/engine PWB	The main/engine PWB is faulty.	Replace the main/engine PWB.	

J4008: Registration sensor non-arrival jam

The registration sensor does not turn on when feed from the duplex section.

Step	Check description	Assumed cause	Measures	Reference
1	Checking the paper	The cut-end of the paper is crushed.	Fan the paper well and load it by reversing the paper direction	

Step	Check description	Assumed cause	Measures	Reference
2	Checking the paper	The paper leading edge is bent.	Remove the bent paper.	
3	Checking the paper	foreign objects are on the paper.	Remove the paper with foreign objects.	
4	Checking the paper	Paper is wavy with moisture or curled.	Correct or replace paper. If difficult to replace, re-load paper by switching top and bottom ends or turning it over.	
5	Checking the DU conveying roller and DU conveying pulley	The conveying performance is lowered or slippage occurs (rotation not smooth).	Clean the DU conveying roller A,B and DU conveying pulley A,B on their surface. If worn don, replace them. If the press spring is deformed, correct and reattach it. If not repaired, replace it.	
6	Checking the driving parts	The main motor drive is not properly transmitted.	Check if the DU conveying roller A, B smoothly rotate manually, clean the drive parts and reattach them if necessary. If not repaired, replace them.	
7	Checking the connection	The connector is not properly connected or the wire is faulty.	Clean the terminal of the following wire connectors and reconnect the connectors. If there is no continuity, replace the wire. • Registration sensor (on the high voltage PWB) - Main/engine PWB (YC16) • Main motor - Main/engine PWB (YC9)	
8	Checking the registration sensor	The registration sensor does not operate properly.	Clean the registration sensor and reconnect the connector. If not repaired, replace the high voltage PWB (including the registration sensor).	
9	Checking the main motor	The main motor does not operate properly.	Reattach the main motor and reconnect the connector. If not repaired, replace it.	
10	Replacing the main/engine PWB	The main/engine PWB is faulty.	Replace the main/engine PWB.	

J4012/J4013/J4018: Registration sensor stay jam

• When feeding from cassette 2,3, the registration sensor does not turn off even passing the specified time after the PF feed sensor is turned off.
• When feeding from duplex, the registration sensor does not turn off even passing the specified time after the registration sensor is turned on.

Step	Check description	Assumed cause	Measures	Reference
1	(In case paper is bent or conveyed in skew) Checking the conveying path	Paper is caught up by the conveying guide or paper piece.	If there is a paper piece or foreign object on the conveying side or a burr on the conveying side of the conveying guide or on the parts such as actuator, remove it or replace it. If there is a scratch, deformation or floating on the sheet or film, correct or replace it.	

Step	Check description	Assumed cause	Measures	Reference
2	(When the paper skew occurs) Relocating the paper width guides	The locations of the paper width guides do not fit with the paper size.	Relocate the paper width guides to fit them with the paper size.	
3	(In case paper is conveyed in skew) Checking the paper stacking level	Paper is loaded above the highest level.	Reload paper within the upper limit label level.	
4	(In case paper is conveyed in skew) Checking the press spring	Pressure balance of the PF conveying pulley is not proper.	Reattach the PF conveying pulley press spring. If deformed, correct or replace it.	
5	(In case multiple paper is fed) Reloading paper	The cut-end of the paper is crushed.	Fan the paper well and load it by reversing the paper direction	
6	(In case multiple paper is fed) Checking the feed roller and retard roller	The paper fanning is not enough.	Clean the feed roller and retard roller. If worn down, replace them.	
7	Checking the PF conveying roller and PF conveying pulley	The PF conveying roller conveying force is not enough.	Clean the PF conveying roller and PF conveying pulley on their surface. If worn down, replace them.	
8	Checking the paper	The paper leading edge is bent.	Remove the bent paper.	
9	Checking the paper	Paper is curled downward or wavy.	Correct or replace paper. If difficult to replace, re-load paper by switching top and bottom ends or turning it over.	
10	Checking the paper	Unspecified papers are used.	Explain to the user to use the paper within the specifications.	
11	Checking the paper	foreign objects are on the paper.	Remove the paper with foreign objects.	
12	Checking the connection	The connector is not properly connected or the wire is faulty.	Clean the terminal of the following wire connectors and reconnect the connectors. If there is no continuity, replace the wire. • Registration sensor (on the high voltage PWB) - Main/engine PWB (YC16) • Registration clutch - Main/engine PWB (YC10)	
13	Checking the registration sensor	The registration sensor does not operate properly.	Clean the registration sensor and reconnect the connector. If not repaired, replace the high voltage PWB (including the registration sensor).	
14	Checking the registration clutch	The registration clutch does not operate properly.	Reattach the registration clutch and reconnect the connector. If not repaired, replace it.	
15	Replacing the main/engine PWB	The main/engine PWB is faulty.	Replace the main/engine PWB.	

J4201/J4202/J4203/J4208/J4209: Exit sensor non-arrival jam

Condition: Paper jam before the fuser section

When feeding from cassette 1-3, duplex or MP tray, the exit sensor does not turn of when passing the specified time after the secondary feed is started.

Step	Check description	Assumed cause	Measures	Reference
1	(In case paper is bent or conveyed in skew) Checking the conveying path	Paper is caught up at the fuser entry guide or paper piece.	If there is a paper piece or foreign object on the conveying side or a foreign object or burr on the conveying side of the fuser entry, remove it or replace the fuser entry guide. If the sheet or film comes off, correct or replace it.	
2	(When the paper skew occurs) Relocating the paper width guides	The locations of the paper width guides do not fit with the paper size.	Relocate the paper width guides to fit them with the paper size.	
3	Checking the fuser roller and drive parts	The fuser roller does not drive properly.	Attach the fuser unit so that the main motor drive is transmitted to the fuser roller. If the fuser roller drive gear is damaged or the busing is worn down, replace them.	

J4201/J4202/J4203/J4208/J4209: Exit sensor non-arrival jam

Condition: Paper jam in the fuser section

When feeding from cassette 1-3, duplex or MP tray, paper jams in the fuser section and the exit sensor does not turn on.

Step	Check description	Assumed cause	Measures	Reference
1	(In case of accordion jam) Checking the actuator and spring	The actuator does not operate properly.	Reattach the exit sensor actuator and spring. If not operating properly due to deformation, correct or replace them.	
2	Checking the fuser exit guide	Paper is caught up at the conveying side of the fuser exit guide.	If there is a burr or fused toner on the conveying side of the fuser exit guide, remove it or replace the fuser unit.	
3	Changing the settings	The actual paper and the paper settings (media type, paper size) do not match.	Select the proper media type in the system menu.	
4	Replacing the paper	The paper curls.	Replace with long grain paper.	
5	Checking the paper	The paper leading edge is bent.	Remove the bent paper.	
6	Checking the paper	The paper is wavy.	Correct or replace paper. If difficult to replace, re-load paper by switching top and bottom ends or turning it over.	
7	Checking the paper	Unspecified papers are used.	Explain to the user to use the paper within the specifications.	
8	Checking the paper	foreign objects are on the paper.	Remove the paper with foreign objects.	

Step	Check description	Assumed cause	Measures	Reference
9	Checking the press roller and fuser belt	Foreign objects adhere to the press roller or fuser belt.	Clean the press roller and fuser belt. Or replace the fuser unit.	

J4201/J4202/J4203/J4208/J4209: Exit sensor non-arrival jam

Condition: Paper rolled up on the fuser roller (leading edge margin less than 4.0mm)

When feeding from cassette 1-3, duplex or MP tray, paper is rolled up along the fuser roller and the exit sensor does not turn on.

Step	Check description	Assumed cause	Measures	Reference
1	Adjusting the paper leading edge timing	The margin at the paper leading edge is incorrect.	If each margin shift is regular, execute U034 to adjust the leading edge timing .	
2	(When the paper skew occurs) Relocating the paper width guides	The locations of the paper width guides do not fit with the paper size.	Relocate the paper width guides to fit them with the paper size.	
3	Replacing the paper	The paper curls.	Replace with long grain paper.	
4	Checking the paper	The paper leading edge is bent.	Remove the bent paper.	
5	Checking the paper	The paper is wavy.	Correct or replace paper. If difficult to replace, re-load paper by switching top and bottom ends or turning it over.	
6	Checking the paper	Unspecified papers are used.	Explain to the user to use the paper within the specifications.	
7	Checking the paper	foreign objects are on the paper.	Remove the paper with foreign objects.	
8	Checking the press roller and fuser belt	Foreign objects adhere to the press roller or fuser belt.	Clean the press roller and fuser belt. Or replace the fuser unit.	

J4201/J4202/J4203/J4208/J4209: Exit sensor non-arrival jam

Condition: Paper rolled up on the fuser roller (leading edge margin 4.0mm or more)

When feeding from cassette 1-3, duplex or MP tray, paper is rolled up along the fuser roller and the exit sensor does not turn on.

Step	Check description	Assumed cause	Measures	Reference
1	Checking the press roller and fuser belt	Foreign objects adhere to the press roller or fuser belt.	Clean the press roller or replace the fuser unit.	

J4201/J4202/J4203/J4208/J4209: Exit sensor non-arrival jam

Condition: Paper jam after passing the lower exit roller

When feeding from cassette 1-3, duplex or MP tray, paper jams after passing through the lower exit roller and the exit sensor does not turn on.

Step	Check description	Assumed cause	Measures	Reference
1	(When the paper skew occurs) Checking the actuator and the spring	The actuator does not operate properly.	Reattach the exit sensor actuator and spring. If not operating properly due to deformation, correct or replace them.	
2	(In case paper is conveyed in skew) Checking the fuser exit guide	The fuser exit guide is deformed.	Reattach the fuser exit guide. If the conveying side of the fuser exit guide is warped, correct it. If not repaired, replace the fuser unit.	
3	(In case paper skews) Checking the lower exit roller	The lower exit roller conveying force is not enough.	Clean the lower exit roller and lower exit pulley on their surface. If the surface is won down, replace the fuser unit.	
4	Checking the paper	The paper leading edge is bent.	Remove the bent paper.	
5	Checking the paper	The paper is wavy.	Correct or replace paper. If difficult to replace, re-load paper by switching top and bottom ends or turning it over.	
6	Checking the paper	Unspecified papers are used.	Explain to the user to use the paper within the specifications.	
7	Checking the paper	foreign objects are on the paper.	Remove the paper with foreign objects.	
8	Checking the connection	The connector is not properly connected or the wire is faulty.	Clean the terminal of the following wire connectors and reconnect the connectors. If there is no continuity, replace the wire. • Exit sensor - Main/engine PWB (YC19)	
9	Checking the exit sensor	The exit sensor does not properly operate.	Clean the exit sensor, reattach it and reconnect the connector. If not repaired, replace the fuser unit (including the exit sensor).	
10	Replacing the fuser unit	The load is applied to the fuser belt.	Replace the fuser unit.	
11	Replacing the main/engine PWB	The main/engine PWB is faulty.	Replace the main/engine PWB.	

J4211/J4212/J4213/J4218/J4219: Exit sensor stay jam

Condition: Paper jam in the fuser section

Paper jams before entering into the upper exit roller and the exit sensor does not turn on.

Step	Check description	Assumed cause	Measures	Reference
1	Checking the paper	The paper curls.	Replace with long grain paper.	

Step	Check description	Assumed cause	Measures	Reference
2	Checking the exit guide	Paper is caught up at the exit guide, a piece of paper, etc..	If there is a paper piece or foreign object on the conveying side or a burr on the conveying side of the exit guide or on the parts such as actuator, remove it. If not repaired, replace it.	
3	Checking the exit guide	Toner is fused on the exit guide.	Clean the conveying side of the exit guide.	
4	Checking the actuator	The actuator is not attached properly.	Reattach the exit sensor actuator.	
5	Checking the connection	The connector is not properly connected or the wire is faulty.	Clean the terminal of the following wire connectors and reconnect the connectors. If there is no continuity, replace the wire. • Exit sensor - Main/engine PWB (YC19) • Main motor - Main/engine PWB (YC9)	
6	Checking the lower exit roller and drive parts	The lower exit roller and drive parts do not operate properly.	Reattach the fuser unit so that the main motor drive is transmitted to the lower exit roller. If the drive gear is damaged or bushing is worn down, replace the fuser unit.	
7	Checking the exit sensor	The exit sensor does not properly operate.	Clean the exit sensor, reattach it and reconnect the connector. If not repaired, replace the fuser unit (including the exit sensor).	
8	Checking the main motor	The main motor does not operate properly.	Reattach the main motor and reconnect the connector. If not repaired, replace it.	
9	Replacing the main/engine PWB	The main/engine PWB is faulty.	Replace the main/engine PWB.	

J4211/J4212/J4213/J4218/J4219: Exit sensor stay jam

Condition: Paper jam in the exit unit

When feeding from cassette 1-3, duplex or MP tray, paper jam occurs at the exit section and the exit sensor does not turn off.

Step	Check description	Assumed cause	Measures	Reference
1	Checking the paper tray	There is an obstacle on the tray.	Remove an obstacle.	
2	Checking the paper tray	The paper stopper on the tray is not stored.	Store the paper stopper.	
3	(When the paper skew occurs) Relocating the paper width guides	The locations of the paper width guides do not fit with the paper size.	Relocate the paper width guides to fit them with the paper size.	
4	(In case paper skews) Checking the exit guide	Foreign objects such as toner, etc. adhere to the exit guide and paper is caught up there.	Clean and reattach the exit guide. If there is a burr on the conveying side of the exit guide, remove it. If not repaired, replace the exit unit.	

Step	Check description	Assumed cause	Measures	Reference
5	Checking the upper exit roller and upper exit pulley	The upper exit roller conveying force is not enough.	Clean the surface of the upper exit roller and upper exit pulley. If worn down, replace them.	
6	Checking the driving parts	The exit roller does not rotate.	In case the drive gear is deformed, torque limiter is faulty or bushing is worn down, replace the exit unit.	
7	(In case the sensor does not turn on with paper) Reattaching the fuser unit or exit unit	The fuser unit or exit unit is not attached properly.	Reattach the fuser unit and exit unit, and reconnect the exit unit connector.	
8	Checking the connection	The connector is not properly connected or the wire is faulty.	Clean the terminal of the following wire connectors and reconnect the connectors. If there is no continuity, replace the wire. • Main motor - Main/engine PWB (YC9) • Exit sensor - Main/engine PWB (YC19)	
9	Checking the main motor	The main motor does not operate properly.	Reattach the main motor and reconnect the connector. If not repaired, replace it.	
10	Checking the actuator and the spring	The actuator does not operate properly.	Reattach the actuator and spring for the exit sensor. If faulty due to deformation, etc., correct it. If not repaired, replace the fuser unit.	
11	Checking the exit sensor	The exit sensor does not properly operate.	Clean the exit sensor, reattach it and reconnect the connector. If not repaired, replace the fuser unit (including the exit sensor).	
12	Replacing the main/engine PWB	The main/engine PWB is faulty.	Replace the main/engine PWB.	

J4211/J4212/J4213/J4218/J4219: Exit sensor stay jam

Condition: Paper jam at FD guide

When feeding from cassette 1-3, duplex or MP tray, paper jam occurs at the feed-shift section and the exit sensor does not turn off.

Step	Check description	Assumed cause	Measures	Reference
1	Checking the paper	Unspecified papers are used.	Explain to the user to use the paper within the specifications.	
2	Checking the paper	foreign objects are on the paper.	Remove the paper with foreign objects.	
3	Checking the paper	The paper leading edge is bent.	Remove the bent paper.	
4	Checking the paper	The paper is wavy.	Correct or replace paper. If difficult to replace, re-load paper by switching top and bottom ends or turning it over.	

Step	Check description	Assumed cause	Measures	Reference
5	(In case paper hits the FD guide and jams) Cleaning the FD guide	Toner is fused on the FD guide.	Clean the conveying side of the FD guide.	
6	(In case paper jam occurs at the FD guide) Replacing paper	The paper curls.	Replace with long grain paper.	
7	(In case paper jam occurs at the FD guide) Replacing paper	Paper stiffness is lowered with moisture.	Replace the paper.	
8	(In case paper jam occurs at the FD guide) Checking paper	The actual paper and the paper settings (media type, paper size) do not match.	Select the proper media type in the system menu.	
9	(In case paper hits the FD guide and jams) Checking the conveying path	Paper is caught up at the FD guide or paper piece.	If there is a paper piece or foreign object on the conveying side or a burr on the conveying side of the FD guide or on the parts such as actuator, remove it. If not repaired, replace it.	
10	(In case paper hits the FD guide and jams) Checking the FD guide	The FD guide does not operate properly.	Reattach the FD guide and reconnect the exit unit connector.	
11	(In case paper hits the FD guide and jams) Checking connection	The connector is not properly connected or the wire is faulty.	Clean the terminal of the following wire connectors and reconnect the connectors. If there is no continuity, replace the wire. • Exit solenoid - Main/engine PWB (YC1)	
12	(In case paper hits the FD guide and jams) Checking the exit solenoid	The exit solenoid does not operate properly.	Reattach the exit solenoid and reconnect the connector. If not repaired, replace it.	
13	(In case paper hits the FD guide and jams) Replacing the main/engine PWB	The main/engine PWB is faulty.	Replace the main/engine PWB.	

7-3 Self Diagnostic

*: Before attempting to check the fuser unit and the low voltage power supply PWB, be sure to turn the power switch off and unplug the machine from power.
Even if the power switch of the main unit is turned off and the power cord is unplugged, the electric charge may remain in the capacitors on the low voltage PWB, so that please be careful not to touch the mounted parts to protect you from electric shock.

(1) Self diagnostic error codes

(1-1) Error codes list

Error code	Contents
C0030	FAX PWB system error
C0070	FAX PWB compatibility error
C0100	Backup memory device error
C0120	MAC address data error
C0130	Backup memory reading/writing error
C0140	Backup memory data error
C0150	Engine EEPROM data error
C0160	Engine EEPROM data error
C0170	Charger count error
C0180	Machine serial number mismatch
C0190	Backup memory device error (Engine)
C0500	Drive lock detection by the engine firmware
C0510	High voltage remote control error
C0530	Backup task error
C0540	Engine firmware unexpected control detection
C0800	Print sequence error
C0830	FAX flash program area checksum error
C0840	RTC error ("Time for maintenance T" appears)
C0870	FAX PWB large capacity data transfer error
C0920	FAX file system error
C0970	Power interruption detection
C1810	Paper feeder communication error (PF1)
C1820	Paper feeder communication error (PF2)
C2000	Main motor steady state error
C2010	Main motor startup error
C2600	PF feed motor error (PF1)
C2610	PF feed motor error (PF2)
C3100	Carriage error
C3200	CIS lamp error
C3210	DPCIS lamp error

Error code	Contents
C3300	CIS AGC error
C3310	DPCIS AGC error
C3500	Communication error between the scanner and the ASIC
C4000	Polygon motor startup error
C4010	Polygon motor steady-state error
C4201	Laser error
C6000	Broken fuser heater
C6020	Thermopile high temperature error
C6030	Broken thermopile
C6050	Thermopile low temperature error
C6200	Fuser edge thermistor error
C6220	Fuser edge thermistor high temperature error
C6230	Broken fuser edge thermistor
C6250	Fuser edge thermistor low temperature error
C6400	Zero-cross signal error
C6600	Fuser rotation error
C6610	Fuser press-release sensor error
C6650	Thermopile EEPROM error
C7001	Wall motor error
C7220	Broken in-machine thermistor
C7800	Outer thermistor broken
C7990	Waste toner full

Content of Self Diagnostic

C0030: FAX PWB system error

The FAX PWB does not operate properly.

Step	Check description	Assumed cause	Measures	Reference
1	Checking the connection	The connector is not properly connected or the wire is faulty.	Clean the terminal of the following wire connectors and reconnect the connectors. If there is no continuity, replace the wire. • Main/engine PWB (YC508) - FAX PWB	
2	Reinstalling the FAX PWB	The FAX PWB does not operate properly.	Turn off the power switch and pull out the power plug. After passing 5s, reattach the FAX PWB and reinsert the power plug. Then, turn on the power switch.	
3	Replacing the FAX PWB	The FAX PWB is faulty.	Replace the FAX PWB.	
4	Replacing the main/engine PWB	The main/engine PWB is faulty.	Replace the main/engine PWB.	

C0070: FAX PWB compatibility error

The FAX and the controller mismatch.

Step	Check description	Assumed cause	Measures	Reference
1	Checking the connection	The connector is not properly connected or the wire is faulty.	Clean the terminal of the following wire connectors and reconnect the connectors. If there is no continuity, replace the wire. • Main/engine PWB (YC508) - FAX PWB	
2	Checking the FAX PWB	The incompatible FAX PWB is installed.	Install the FAX PWB for the applicable model.	
3	Replacing the FAX PWB	The FAX PWB is faulty.	Replace the FAX PWB.	

C0100: Backup memory device error

An abnormal status is output from the flash memory.

Step	Check description	Assumed cause	Measures	Reference
1	Resetting the main power	The EEPROM does not operate properly.	Turn off the power switch and unplug the power cord. After 5s passes, reconnect the power cord and turn on the power switch.	
2	Reinstalling the EEPROM	The EEPROM is not properly attached.	Reattach the EEPROM on the main/engine PWB.	
3	Replacing the EEPROM	The EEPROM is faulty.	Replace the EEPROM on the main/engine PWB. After replacement, C0180 appears and execute U004.	
4	Checking the main/engine PWB	The connector is not connected properly or the wire or main/engine PWB is faulty.	Reconnect the connector of the main/engine PWB. If the wire is pinched or scratched, repair or replace it. If not repaired, replace the main/engine PWB.	

C0120: MAC address data error

MAC address data was incorrect data.

Step	Check description	Assumed cause	Measures	Reference
1	Resetting the main power	The flash memory does not operate properly.	Turn off the power switch and unplug the power cord. After 5s passes, reconnect the power cord and turn on the power switch.	
2	Checking the MAC address	The MAC address is incorrect.	Replace the main/engine PWB when the MAC address is not indicated on the network status page.	

C0130: Backup memory reading/writing error

The reading or writing into the flash memory is unavailable.

Step	Check description	Assumed cause	Measures	Reference
1	Resetting the main power	The flash memory does not operate properly.	Turn off the power switch and unplug the power cord. After 5s passes, reconnect the power cord and turn on the power switch.	
2	Checking the main/engine PWB	The connector is not connected properly or the wire or main/engine PWB is faulty.	Reconnect the connector of the main/engine PWB. If the wire is pinched or scratched, repair or replace it. If not repaired, replace the main/engine PWB.	

C0140: Backup memory data error

The data read from the flash memory is judged as abnormal at the startup.

Step	Check description	Assumed cause	Measures	Reference
1	Resetting the main power	The flash memory does not operate properly.	Turn off the power switch and unplug the power cord. After 5s passes, reconnect the power cord and turn on the power switch.	
2	Executing U021	The flash memory does not operate properly.	Execute U021.	
3	Checking the main/engine PWB	The connector is not connected properly or the wire or main/engine PWB is faulty.	Reconnect the connector of the main/engine PWB. If the wire is pinched or scratched, repair or replace it. If not repaired, replace the main/engine PWB.	

C0150: Engine EEPROM data error

1. After writing in the EEPROM, written value and readout value after writing mismatched 8 times consecutively.
2. After reading from the EEPROM, readout value from the same location mismatched 8 times consecutively.

Step	Check description	Assumed cause	Measures	Reference
1	Resetting the main power	The EEPROM does not operate properly.	Turn off the power switch and unplug the power cord. After 5s passes, reconnect the power cord and turn on the power switch.	
2	Reinstalling the EEPROM	The EEPROM is not properly attached.	Reattach the EEPROM on the main/engine PWB.	
3	Replacing the EEPROM	The EEPROM is faulty.	Replace the EEPROM on the main/engine PWB and execute U004.	
4	Checking the main/engine PWB	The connector is not connected properly or the wire or main/engine PWB is faulty.	Reconnect the connector of the main/engine PWB. If the wire is pinched or scratched, repair or replace it. If not repaired, replace the main/engine PWB.	

C0160: Engine EEPROM data error

The data read from the EEPROM is judged as abnormal.

Step	Check description	Assumed cause	Measures	Reference
1	Resetting the main power	The EEPROM does not operate properly.	Turn off the power switch and unplug the power cord. After 5s passes, reconnect the power cord and turn on the power switch.	
2	Executing U021	The data saved in the EEPROM is faulty.	Execute U021.	
3	Replacing the EEPROM	The EEPROM is faulty.	Replace the EEPROM on the main/engine PWB and execute U004.	

C0170: Charger count error

The values in one of the billing counters, life counter or the scanner counter mismatch between the main side and the engine side.

Step	Check description	Assumed cause	Measures	Reference
1	Checking the machine serial number in the EEPROM on the main/engine PWB	The main/engine PWB for the different main unit is installed.	Check the main and engine machine serial number in U004 and if the main number is different, attach the correct main/engine PWB.	
2	Checking the machine serial number in the EEPROM on the main/engine PWB	The EEPROM for the different main unit is installed.	Check the main and engine machine serial number in U004 and if the engine number is different, install the correct EEPROM in the main/engine PWB.	
3	Replacing the main/engine PWB	The main/engine PWB is faulty.	Check the main and engine machine serial number in U004 and if the main number is different, replace the main/engine PWB and execute U004.	
4	Checking the EEPROM	The EEPROM is faulty.	Check the main and engine machine serial number in U004 and if the engine number is different, reinstall the EEPROM in the main/engine PWB. If not repaired, replace the EEPROM and execute U004. Note: Do not execute U004 (selecting [Execute] and pressing the [Start] key). A different machine serial number is overwritten.	
4	Replacing the main/engine PWB	The main/engine PWB is faulty.	Replace the main/engine PWB.	

C0180: Machine serial number mismatch

Machine serial number mismatch between the main and engine side when turning the power on.

Step	Check description	Assumed cause	Measures	Reference
1	Checking the machine serial number in the EEPROM on the main/engine PWB	The main/engine PWB for the different main unit is installed.	Check the main and engine machine serial number in U004 and if the main number is different, attach the correct main/engine PWB.	
2	Checking the machine serial number in the EEPROM on the main/engine PWB	The EEPROM for the different main unit is installed.	Check the main and engine machine serial number in U004 and if the engine number is different, install the correct EEPROM in the main/engine PWB.	
3	Replacing the main/engine PWB	The main/engine PWB is faulty.	Check the main and engine machine serial number in U004 and if the main number is different, replace the main/engine PWB and execute U004.	
4	Checking the EEPROM	The EEPROM is faulty.	Check the main and engine machine serial number in U004 and if the engine number is different, reinstall the EEPROM in the main/engine PWB. If not repaired, replace the EEPROM and execute U004. Note: Do not execute U004 (selecting [Execute] and pressing the [Start] key). A different machine serial number is overwritten.	
5	Replacing the main/engine PWB	The main/engine PWB is faulty.	Replace the main/engine PWB.	

C0190: Backup memory device error (Engine)

The data is not read from the EEPROM when turning the power on. (3 retries)

Step	Check description	Assumed cause	Measures	Reference
1	Resetting the main power	The EEPROM is not properly read.	Turn off the power switch and unplug the power cord. After 5s passes, reconnect the power cord and turn on the power switch.	
2	Checking the main/engine PWB	The connector is not connected properly or the wire or main/engine PWB is faulty.	Reconnect the connector of the main/engine PWB. If the wire is pinched or scratched, repair or replace it. If not repaired, replace the main/engine PWB.	
3	Replacing the EEPROM	The data is not properly read since the EEPROM is faulty.	Contact the service support to acquire the new EEPROM, and install it on the main/engine PWB.	

C0500: Drive lock detection by the engine firmware

The main motor continuously rotates.

Step	Check description	Assumed cause	Measures	Reference
1	Resetting the main power	The main/engine PWB does not correctly operate.	Turn off the power switch and unplug the power cord. After 5s passes, reconnect the power cord and turn on the power switch.	
2	Checking the main/engine PWB	The connector is not connected properly or the wire or main/engine PWB is faulty.	Reconnect the connector of the main/engine PWB. If the wire is pinched or scratched, repair or replace it. If not repaired, replace the main/engine PWB.	

C0510: High voltage remote control error

Only the high voltage PWB remote signal turns on while the drum unit is not driven.

Step	Check description	Assumed cause	Measures	Reference
1	Resetting the main power	The main/engine PWB does not correctly operate.	Turn off the power switch and unplug the power cord. After 5s passes, reconnect the power cord and turn on the power switch.	
2	Checking the main/engine PWB	The connector and FFC are not connected properly or the wire, FFC or PWB is faulty.	Reconnect the connector of the main/engine PWB. If the wire is pinched or scratched, repair or replace it. If not repaired, replace the main/engine PWB.	

C0530: Backup task error

The backup task does not operate for 30s or more.

Step	Check description	Assumed cause	Measures	Reference
1	Resetting the main power	The main/engine PWB does not correctly operate.	Turn off the power switch and unplug the power cord. After 5s passes, reconnect the power cord and turn on the power switch.	
2	Checking the main/engine PWB	The connector is not connected properly or the wire or main/engine PWB is faulty.	Reconnect the connector of the main/engine PWB. If the wire is pinched or scratched, repair or replace it. If not repaired, replace the main/engine PWB.	

C0540: Engine firmware unexpected control detection

The solenoid turns on over the certain time.

Step	Check description	Assumed cause	Measures	Reference
1	Resetting the main power	The main/engine PWB does not correctly operate.	Turn off the power switch and unplug the power cord. After 5s passes, reconnect the power cord and turn on the power switch.	

Step	Check description	Assumed cause	Measures	Reference
2	Checking the main/engine PWB	The connector is not connected properly or the wire or main/engine PWB is faulty.	Reconnect the connector of the main/engine PWB. If the wire is pinched or scratched, repair or replace it. If not repaired, replace the main/engine PWB.	

C0800: Print sequence error

Print sequence jam (J010x) occurred twice consecutively.

Step	Check description	Assumed cause	Measures	Reference
1	Resetting the main power	The main/engine PWB does not correctly operate.	Turn off the power switch and unplug the power cord. After 5s passes, reconnect the power cord and turn on the power switch.	
2	Checking the main/engine PWB	The connector is not connected properly or the wire or main/engine PWB is faulty.	Reconnect the connector of the main/engine PWB. If the wire is pinched or scratched, repair or replace it. If not repaired, replace the main/engine PWB.	

C0830: FAX flash program area checksum error

The FAX program saved in the flash memory is broken.

Step	Check description	Assumed cause	Measures	Reference
1	Reinstalling the FAX PWB	The FAX PWB does not operate properly.	Turn off the power switch and pull out the power plug. After passing 5s, reattach the FAX PWB and reinsert the power plug. Then, turn on the power switch.	
2	Checking the connection	The connector is not properly connected or the wire is faulty.	Clean the terminal of the following wire connectors and reconnect the connectors. If there is no continuity, replace the wire. • Main/engine PWB (YC508) - FAX PWB	
3	Initializing the fax	The data in the FAX PWB is faulty.	Execute U600 to initialize the FAX.	
4	Replacing the FAX PWB	The FAX PWB is faulty.	Replace the FAX PWB.	
5	Replacing the main/engine PWB	The main/engine PWB is faulty.	Replace the main/engine PWB.	

C0840: RTC error ("Time for maintenance T" appears)

<Check at start-up>
• RTC value has returned to the past
• No power was supplied for 5 years or more
• RTC setting value is older than 2000/01/01
<Checked regularly at every 5 minutes>
• RTC has returned to the past than the previous check
• After C0840 was detected and the main power was reset for partial operation, [Time for Maintenance T] is displayed

Step	Check description	Assumed cause	Measures	Reference
1	Setting the RTC	RTC is not properly set.	Set the RTC in the System Menu.	
2	Reattaching the main/engine PWB	The main/engine PWB is not correctly attached.	Retighten the screws for the main/engine PWB.	
3	Checking the main/engine PWB	The connector is not connected properly or the wire or main/engine PWB is faulty.	Reconnect the connector of the main/engine PWB. If the wire is pinched or scratched, repair or replace it. If not repaired, replace the main/engine PWB.	

C0870: FAX PWB large capacity data transfer error

The DMA transfer failed between the controller and FAX PWB.

Step	Check description	Assumed cause	Measures	Reference
1	Reinstalling the FAX PWB	The FAX PWB does not operate properly.	Turn off the power switch and pull out the power plug. After passing 5s, reattach the FAX PWB and reinsert the power plug. Then, turn on the power switch.	
2	Checking the connection	The connector is not properly connected or the wire is faulty.	Clean the terminal of the following wire connectors and reconnect the connectors. If there is no continuity, replace the wire. • Main/engine PWB (YC508) - FAX PWB	
2	Replacing the FAX PWB	The FAX PWB is faulty.	Replace the FAX PWB.	
3	Replacing the main/engine PWB	The main/engine PWB is faulty.	Replace the main/engine PWB.	

C0920: FAX file system error

The file system in the FAX PWB flash memory is broken.

Step	Check description	Assumed cause	Measures	Reference
1	Reinstalling the FAX PWB	The FAX PWB does not operate properly.	Turn off the power switch and pull out the power plug. After passing 5s, reattach the FAX PWB and reinsert the power plug. Then, turn on the power switch.	

Step	Check description	Assumed cause	Measures	Reference
2	Checking the connection	The connector is not properly connected or the wire is faulty.	Clean the terminal of the following wire connectors and reconnect the connectors. If there is no continuity, replace the wire. • Main/engine PWB (YC508) - FAX PWB	
3	Initializing the fax	FAX control values are incorrect	Execute U600 to initialize the FAX.	
4	Replacing the FAX PWB	The FAX PWB is faulty.	Replace the FAX PWB.	
5	Replacing the main/engine PWB	The main/engine PWB is faulty.	Replace the main/engine PWB.	

C0970: Power interruption detection

Step	Check description	Assumed cause	Measures	Reference
1	Checking the interlock switch	The interlock switch does not turn on.	Check if the interlock switch turns on by opening/closing the right cover. If not, reattach the interlock switch.	
2	Resetting the main power	The main/engine PWB does not correctly operate.	Turn off the power switch and unplug the power cord. After 5s passes, reconnect the power cord and turn on the power switch.	
3	Checking the connection	The connector is not properly connected or the wire is faulty.	Clean the terminal of the following wire connectors and reconnect the connectors. If there is no continuity, replace the wire. • Low voltage PWB (YC103) - Main/engine PWB (YC20)	
4	Replacing the low voltage PWB.	The low voltage PWB is faulty.	Replace the low voltage PWB.	
5	Replacing the main/engine PWB	The main/engine PWB is faulty.	Replace the main/engine PWB.	

C1810: Paper feeder communication error (PF1)

Target: Paper feeder 1

No paper feeder is detected after the paper feeder installation is detected when turning the power on.

Step	Check description	Assumed cause	Measures	Reference
1	Reinstalling the paper feeder	The drawer connector between the main unit and paper feeder 1 is not connected properly.	Place the main unit on the paper feeder 1 so that the drawer connector is securely connected.	

Step	Check description	Assumed cause	Measures	Reference
2	Checking the connection	The connector is not connected properly or, the wire or drawer connector is faulty.	Check and clean the terminal of the following wire connectors or, repair and reconnect the connectors. If there is no continuity or the drawer connector is faulty, replace the wire. • PF main PWB (YC5) - Drawer connector • Drawer connector - Main/engine PWB (YC17)	
3	Replacing the PF main PWB	The PF main PWB is faulty.	Replace the PF main PWB.	
4	Replacing the main/engine PWB	The main/engine PWB is faulty.	Replace the main/engine PWB.	

C1820: Paper feeder communication error (PF2)

Target: Paper feeder 2

No paper feeder is detected after the paper feeder installation is detected when turning the power on.

Step	Check description	Assumed cause	Measures	Reference
1	Reinstalling the paper feeder	The drawer connector between the paper feeder 1 and the paper feeder 2 is not connected properly.	Place the main unit and the paper feeder 1 on the paper feeder 2 so that the drawer connectors are securely connected.	
2	Checking the connection	The connector is not connected properly or, the wire or drawer connector is faulty.	Check and clean the terminal of the following wire connectors or, repair and reconnect the connectors. If there is no continuity or the drawer connector is faulty, replace the wire. • PF main PWB (YC5)(PF2) - Drawer connector • Drawer connector - PF main PWB (YC6)(PF1) • PF main PWB (YC5)(PF1) - Drawer connector • Drawer connector - Main/engine PWB (YC17)	
3	Replacing the PF main PWB	The PF main PWB is faulty.	Replace the PF main PWB.	
4	Replacing the main/engine PWB	The main/engine PWB is faulty.	Replace the main/engine PWB.	

C2000: Main motor steady state error

Ready signal turns off for 1s consecutively after the motor becomes stable.

Step	Check description	Assumed cause	Measures	Reference
1	Checking the drum unit and the developer unit	More load is applied to the main motor drive caused by the drum unit lockup.	Check if the drum smoothly rotates manually and if locked, replace the drum unit.	
2	Checking the connection	The connector is not properly connected or the wire is faulty.	Clean the terminal of the following wire connectors and reconnect the connectors. If there is no continuity, replace the wire. • Main motor - Main/engine PWB (YC9)	
3	Checking the driving parts	The main motor drive parts do not properly operate.	If the coupling and gear in the main motor drive section do not rotate smoothly, clean the gear and apply grease to it. If the coupling or gear is broken, replace it.	
4	Replacing the main motor	The main motor is faulty.	Replace the main motor.	
5	Replacing the main/engine PWB	The main/engine PWB is faulty.	Replace the main/engine PWB.	

C2010: Main motor startup error

Ready signal does not turn on even passing 2s after the main motor starts up.

Step	Check description	Assumed cause	Measures	Reference
1	Checking the drum unit and the developer unit	More load is applied to the main motor drive caused by the drum unit lockup.	Check if the drum smoothly rotates manually and if locked, replace the drum unit.	
2	Checking the connection	The connector is not properly connected or the wire is faulty.	Clean the terminal of the following wire connectors and reconnect the connectors. If there is no continuity, replace the wire. • Main motor - Main/engine PWB (YC9)	
3	Checking the driving parts	The main motor drive parts do not properly operate.	If the coupling and gear in the main motor drive section do not rotate smoothly, clean the gear and apply grease to it. If the coupling or gear is broken, replace it.	
4	Replacing the main motor	The main motor is faulty.	Replace the main motor.	
5	Replacing the main/engine PWB	The main/engine PWB is faulty.	Replace the main/engine PWB.	

C2600: PF feed motor error (PF1)

Target: Paper feeder 1

Ready signal does not turn on even passing 2s after the PF feed motor starts up.

Step	Check description	Assumed cause	Measures	Reference
1	Checking the connection	The connector is not properly connected or the wire is faulty.	Clean the terminal of the following wire connectors and reconnect the connectors. If there is no continuity, replace the wire. • PF feed motor - PF main PWB (YC4) • PF main PWB (YC5) - Drawer connector • Drawer connector - Main/engine PWB (YC17)	
2	Checking the driving parts	The PF feed motor drive parts do not operate properly.	If the coupling and gear in the PF feed motor drive section do not rotate smoothly, clean the gear and apply grease to it. If the coupling or gear is broken, replace it.	
3	Replacing the PF feed motor	The PF feed motor is faulty.	Replace the PF feed motor	
4	Replacing the main/engine PWB	The main/engine PWB is faulty.	Replace the main/engine PWB.	

C2610: PF feed motor error (PF2)

Target: Paper feeder 2

Ready signal does not turn on even passing 2s after the PF feed motor starts up.

Step	Check description	Assumed cause	Measures	Reference
1	Checking the connection	The connector is not properly connected or the wire is faulty.	Clean the terminal of the following wire connectors and reconnect the connectors. If there is no continuity, replace the wire. • PF feed motor - PF main PWB (YC4)(PF2) • PF main PWB (YC5)(PF2) - Drawer connector • Drawer connector - PF main PWB (YC6)(PF1) • PF main PWB (YC5)(PF1) - Drawer connector • Drawer connector - Main/engine PWB (YC17)	
2	Checking the driving parts	The PF feed motor drive parts do not operate properly.	If the coupling and gear in the PF feed motor drive section do not rotate smoothly, clean the gear and apply grease to it. If the coupling or gear is broken, replace it.	

Step	Check description	Assumed cause	Measures	Reference
4	Replacing the PF feed motor	The PF feed motor is faulty.	Replace the PF feed motor	
5	Replacing the main/engine PWB	The main/engine PWB is faulty.	Replace the main/engine PWB.	

C3100: Carriage error

The position of the home position sensor (turning on / off) mismatches when turning the main power on or finishing the original scan by the scanner.

Step	Check description	Assumed cause	Measures	Reference
1	Checking the scanner movement	A load is applied to the scanner movement.	If there is an excessive load to the scanner movement when manually shifting the scanner carriage, check if foreign material is on the scanner drive belt. Then, clean the scanner drive belt and apply the grease to the ISU shaft.	
2	Checking the tension of the drive belt	A load is applied to the scanner movement since the drive belt tension is improper.	Adjust the drive belt tension properly.	
3	Checking the connection	The connector and FFC are not connected properly or the wire or FFC is faulty.	Reconnect the connector and the FFC. If there is no continuity, replace the wire. If the FFC terminal is peeled, deformed or broken, replace it. • Home position sensor - Main/engine PWB (YC31) • Scanner motor - Main/engine PWB (YC31) • CIS - Main/engine PWB (YC506)	
4	Checking the home position sensor	The home position sensor is not attached properly or faulty.	Reattach the home position sensor and reconnect the connector. If not repaired, replace it.	
5	Checking the scanner motor	The scanner motor is not attached properly or faulty.	Reattach the scanner motor and reconnect the connector. If not repaired, replace it.	
6	Replacing the scanner carriage	The CIS is faulty.	Replace the scanner carriage and execute U411 [Table(ChartA)] and [DP FU(ChartA)].	
7	Firmware upgrade	The firmware is faulty.	Upgrade the engine firmware to the latest version	
8	Replacing the main/engine PWB	The main/engine PWB is faulty.	Replace the main/engine PWB.	

C3200: CIS lamp error

The white reference data obtained by turning the CIS lamp on at initialization was less than the specified value.

Step	Check description	Assumed cause	Measures	Reference
1	Checking the connection	The FFC terminal is not properly connected or faulty.	Reconnect the following FFC. If the FFC terminal is peeled, deformed or broken, replace it. • CIS - Main/engine PWB (YC506)	
2	Replacing the scanner carriage	The CIS is faulty.	Replace the scanner carriage and execute U411 [Table(ChartA)] and [DP FU(ChartA)].	
3	Replacing the main/engine PWB	The main/engine PWB is faulty.	Replace the main/engine PWB.	

C3210: DPCIS lamp error

Target: 40ppm model

The white reference data obtained by turning the DPCIS lamp on at initialization was less than the specified value.

Step	Check description	Assumed cause	Measures	Reference
1	Checking the connection	The FFC terminal is not properly connected or faulty.	Reconnect the following FFC. If the FFC terminal is peeled, deformed or broken, replace it. • DPCIS - Main/engine PWB (YC509)	
2	Replacing the DPCIS	The DPCIS is faulty.	Replace the DPCIS, and then execute U411 [DP FD(ChartA)].	
3	Replacing the main/engine PWB	The main/engine PWB is faulty.	Replace the main/engine PWB.	

C3300: CIS AGC error

The DPCIS could not acquire the correct white reference value while AGC process was executed.

Step	Check description	Assumed cause	Measures	Reference
1	Checking the connection	The FFC terminal is not properly connected or faulty.	Reconnect the following FFC. If the FFC terminal is peeled, deformed or broken, replace it. • CIS - Main/engine PWB (YC506)	
2	Replacing the scanner carriage	The CIS is faulty.	Replace the scanner carriage and execute U411 [Table(ChartA)] and [DP FU(ChartA)].	
3	Replacing the main/engine PWB	The main/engine PWB is faulty.	Replace the main/engine PWB.	

C3310: DPCIS AGC error

Target: 40ppm model

Proper white reference value was not obtained from the DPCIS after AGC.

Step	Check description	Assumed cause	Measures	Reference
1	Checking the connection	The FFC terminal is not properly connected or faulty.	Reconnect the following FFC. If the FFC terminal is peeled, deformed or broken, replace it. • DPCIS - Main/engine PWB (YC509)	
2	Replacing the DPCIS	The DPCIS is faulty.	Replace the DPCIS, and then execute U411 [DP FD(ChartA)].	
3	Replacing the main/engine PWB	The main/engine PWB is faulty.	Replace the main/engine PWB.	

C3500: Communication error between the scanner and the ASIC

The communication error was detected during the communication between the scanner ASIC and the engine CPU.

Step	Check description	Assumed cause	Measures	Reference
1	Checking the connection	The FFC terminal is not properly connected or faulty.	Reconnect the following FFC. If the FFC terminal is peeled, deformed or broken, replace it. • CIS - Main/engine PWB (YC506)	
2	Replacing the scanner carriage	The scanner carriage is faulty.	Replace the scanner carriage and execute U411 [Table(ChartA)] and [DP FU(ChartA)].	
3	Replacing the main/engine PWB	The main/engine PWB is faulty.	Replace the main/engine PWB.	

C4000: Polygon motor startup error

Ready signal does not turn on even passing 10s after the polygon motor starts up.

Step	Check description	Assumed cause	Measures	Reference
1	Checking the connection	The connector is not properly connected or the wire is faulty.	Clean and reattach the wire connector terminal as follows. If there is no continuity, replace the wire. • LSU (polygon motor) - Main/engine PWB (YC3)	
2	Checking the LSU	The polygon motor does not rotate properly.	Check the polygon motor rotation sound. If not rotating properly, reattach the LSU. If not repaired, replace it.	
3	Replacing the main/engine PWB	The main/engine PWB is faulty.	Replace the main/engine PWB.	

C4010: Polygon motor steady-state error

Ready signal turns off for 1s consecutively after the polygon motor becomes stable.

Step	Check description	Assumed cause	Measures	Reference
1	Checking the connection	The connector is not properly connected or the wire is faulty.	Clean and reattach the wire connector terminal as follows. If there is no continuity, replace the wire. • LSU (polygon motor) - Main/engine PWB (YC3)	
2	Checking the LSU	The polygon motor does not rotate properly.	Check the polygon motor rotation sound. If not rotating properly, reattach the LSU. If not repaired, replace it.	
3	Replacing the main/engine PWB	The main/engine PWB is faulty.	Replace the main/engine PWB.	

C4201: Laser error

Laser cannot be received for 1s after starting laser emission.

Step	Check description	Assumed cause	Measures	Reference
1	Checking the connection	The FFC terminal is not properly connected or faulty.	Reconnect the following FFC. If the FFC terminal is peeled, deformed or broken, replace it. • LSU (APC PWB) - Main/engine PWB (YC505)	
2	Checking the LSU	The laser diode is faulty.	Reattach the LSU while taking care of static electricity. If not repaired, replace it.	
3	Replacing the main/engine PWB	The main/engine PWB is faulty.	Replace the main/engine PWB.	

C6000: Broken fuser heater

1. During warm-up, the temperature detected by the thermopile does not reach 100°C/212°F even if the fuser heater is turned on for 10s consecutively.2. During warm-up, the temperature detected by the thermopile does not reach Ready temperature even passing 30s after the temperature detected by the thermopile reached 60°C/140°F.

Step	Check description	Assumed cause	Measures	Reference
1	Removing a piece of paper	A piece of paper resides in the fuser unit and the thermopile cannot detect temperature properly.	Remove a piece of paper remaining in the fuser unit.	
2	Checking the connection	The connector is not properly connected or the wire is faulty.	Clean the terminal of the following wire connectors and reconnect the connectors. If there is no continuity, replace the wire. • Fuser unit - Main/engine PWB (YC19) • Low voltage PWB (YC103) - Main/engine PWB (YC20)	
3	Replacing the fuser unit	The fuser heater is broken.	Replace the fuser unit.	

Step	Check description	Assumed cause	Measures	Reference
4	Replacing the low voltage PWB.	The low voltage PWB is faulty.	Replace the low voltage PWB.	
5	Replacing the main/engine PWB	The main/engine PWB is faulty.	Replace the main/engine PWB.	

C6020: Thermopile high temperature error

1. The thermopile detected 200°C/392°F or more for 5s.
2. The thermopile detected 200°C/392°F or more for 0.5s when passing 1s or more after the drive stopped. (however, at the emergency stop, the relay circuit is used and this detection is not done.)

Step	Check description	Assumed cause	Measures	Reference
1	Checking the connection	The connector is not properly connected or the wire is faulty.	Clean the terminal of the following wire connectors and reconnect the connectors. If there is no continuity, replace the wire. • Thermopile - Main/engine PWB (YC2)	
2	Replacing the thermopile	The thermopile is faulty.	Replace the thermopile.	
3	Replacing the main/engine PWB	The main/engine PWB is faulty.	Replace the main/engine PWB.	

C6030: Broken thermopile

The thermopile AD value is abnormal.

Step	Check description	Assumed cause	Measures	Reference
1	Removing a piece of paper	A piece of paper resides in the fuser unit and the thermopile cannot detect temperature properly.	Remove a piece of paper.	
2	Checking the connection	The connector is not properly connected or the wire is faulty.	Clean the terminal of the following wire connectors and reconnect the connectors. If there is no continuity, replace the wire. • Thermopile - Main/engine PWB (YC2)	
3	Replacing the thermopile	The thermopile is faulty.	Replace the thermopile.	
4	Replacing the main/engine PWB	The main/engine PWB is faulty.	Replace the main/engine PWB.	

C6050: Thermopile low temperature error

During stand-by or printing, the thermopile detected less than 100°C/212°F for 3s consecutively.

Step	Check description	Assumed cause	Measures	Reference
1	Changing the external power source	The power supply voltage reduces.	Connect the power cord to a different wall outlet if the power supply voltage descends by 10% or more of the rated voltage, or multiple devices use the same outlet.	

Step	Check description	Assumed cause	Measures	Reference
2	Removing a piece of paper	A piece of paper resides in the fuser unit and the thermopile cannot detect temperature properly.	Remove a piece of paper remaining in the fuser unit.	
3	Checking the connection	The connector is not properly connected or the wire is faulty.	Clean the terminal of the following wire connectors and reconnect the connectors. If there is no continuity, replace the wire. • Thermopile - Main/engine PWB (YC2)	
4	Replacing the thermopile	The thermopile is faulty.	Replace the thermopile.	
5	Replacing the main/engine PWB	The main/engine PWB is faulty.	Replace the main/engine PWB.	

C6200: Fuser edge thermistor error

1. During warm-up, the temperature detected by the edge thermistor does not reach 60°C/140°F when turning the heater on for 30s consecutively.
2. During warm-up, the temperature detected by the edge thermistor does not reach Ready temperature when passing 20s after the temperature detected by the edge thermistor reached 60°C/140°F.

Step	Check description	Assumed cause	Measures	Reference
1	Reinstalling the fuser unit	The fuser unit drawer connector is not inserted completely.	Reinstall the fuser unit so that the drawer connector is connected securely.	
2	Checking the connection	The connector is not properly connected or the wire is faulty.	Clean the terminal of the following wire connectors and reconnect the connectors. If there is no continuity, replace the wire. • Fuser unit - Main/engine PWB (YC19)	
3	Replacing the fuser unit	The fuser edge thermistor is faulty and cannot detect correct temperature.	Replace the fuser unit.	
4	Checking the connection	The connector is not properly connected or the wire is faulty.	Clean the terminal of the following wire connectors and reconnect the connectors. If there is no continuity, replace the wire. • Low voltage PWB (YC103) - Main/engine PWB (YC20)	
5	Replacing the low voltage PWB.	The low voltage PWB is faulty.	Replace the low voltage PWB.	
6	Replacing the main/engine PWB	The main/engine PWB is faulty.	Replace the main/engine PWB.	

C6220: Fuser edge thermistor high temperature error

1. While drive is stopped, the fuser edge thermistor detected 240°C/464°F or more.
2. During drive, the fuser edge thermistor detected 255°C/491°F or more.

Step	Check description	Assumed cause	Measures	Reference
1	Reinstalling the fuser unit	The fuser unit drawer connector is not inserted completely.	Reinstall the fuser unit so that the drawer connector is connected securely.	
2	Checking the connection	The connector is not properly connected or the wire is faulty.	Clean the terminal of the following wire connectors and reconnect the connectors. If there is no continuity, replace the wire. • Fuser unit - Main/engine PWB (YC19)	
3	Replacing the fuser unit	The fuser edge thermistor is faulty and cannot detect correct temperature.	Replace the fuser unit.	
4	Checking the connection	The connector is not properly connected or the wire is faulty.	Clean the terminal of the following wire connectors and reconnect the connectors. If there is no continuity, replace the wire. • Low voltage PWB (YC103) - Main/engine PWB (YC20)	
5	Replacing the low voltage PWB.	The low voltage PWB is faulty.	Replace the low voltage PWB.	
6	Replacing the main/engine PWB	The main/engine PWB is faulty.	Replace the main/engine PWB.	

C6230: Broken fuser edge thermistor

The fuser thermistor AD value is abnormal.

Step	Check description	Assumed cause	Measures	Reference
1	Reinstalling the fuser unit	The fuser unit drawer connector is not inserted completely.	Reinstall the fuser unit so that the drawer connector is connected securely.	
2	Checking the connection	The connector is not properly connected or the wire is faulty.	Clean the terminal of the following wire connectors and reconnect the connectors. If there is no continuity, replace the wire. • Fuser unit - Main/engine PWB (YC19)	
3	Replacing the fuser unit	The fuser edge thermistor is faulty and cannot detect correct temperature.	Replace the fuser unit.	
4	Checking the connection	The connector is not properly connected or the wire is faulty.	Clean the terminal of the following wire connectors and reconnect the connectors. If there is no continuity, replace the wire. • Low voltage PWB (YC103) - Main/engine PWB (YC20)	

Step	Check description	Assumed cause	Measures	Reference
5	Replacing the low voltage PWB.	The low voltage PWB is faulty.	Replace the low voltage PWB.	
6	Replacing the main/engine PWB	The main/engine PWB is faulty.	Replace the main/engine PWB.	

C6250: Fuser edge thermistor low temperature error

During printing, the fuser edge thermistor detected less than 60°C/140°F for consecutive 3s or more.

Step	Check description	Assumed cause	Measures	Reference
1	Reinstalling the fuser unit	The fuser unit drawer connector is not inserted completely.	Reinstall the fuser unit so that the drawer connector is connected securely.	
2	Checking the connection	The connector is not properly connected or the wire is faulty.	Clean the terminal of the following wire connectors and reconnect the connectors. If there is no continuity, replace the wire. • Fuser unit - Main/engine PWB (YC19)	
3	Replacing the fuser unit	The fuser edge thermistor is faulty and cannot detect correct temperature.	Replace the fuser unit.	
4	Checking the connection	The connector is not properly connected or the wire is faulty.	Clean the terminal of the following wire connectors and reconnect the connectors. If there is no continuity, replace the wire. • Low voltage PWB (YC103) - Main/engine PWB (YC20)	
5	Replacing the low voltage PWB.	The low voltage PWB is faulty.	Replace the low voltage PWB.	
6	Replacing the main/engine PWB	The main/engine PWB is faulty.	Replace the main/engine PWB.	

C6400: Zero-cross signal error

During the fuser heater on, the zero cross signal is not input for 1s consecutively.

Step	Check description	Assumed cause	Measures	Reference
1	Checking the connection	The connector is not properly connected or the wire is faulty.	Clean the terminal of the following wire connectors and reconnect the connectors. If there is no continuity, replace the wire. • Low voltage PWB (YC103) - Main/engine PWB (YC20)	
2	Replacing the low voltage PWB.	The low voltage PWB is faulty.	Replace the low voltage PWB.	
3	Replacing the main/engine PWB	The main/engine PWB is faulty.	Replace the main/engine PWB.	

C6600: Fuser rotation error

Despite the motor stable signal input, the fuser roller rotation detection signal is not input for 2s consecutively.

Step	Check description	Assumed cause	Measures	Reference
1	Removing a piece of paper	A piece of paper resides in the fuser unit and the fuser pressure release does not operate properly.	Remove a piece of paper remaining in the fuser unit.	
2	Checking the connection	The connector is not properly connected or the wire is faulty.	Clean the terminal of the following wire connectors and reconnect the connectors. If there is no continuity, replace the wire. • Fuser unit - Main/engine PWB (YC19)	
3	Replacing the fuser unit	The fuser unit is faulty.	Replace the fuser unit.	
4	Replacing the main/engine PWB	The main/engine PWB is faulty.	Replace the main/engine PWB.	

C6610: Fuser press-release sensor error

1. The fuser pressure release sensor does not turn on even passing 10s after starting the fuser pressure increase.
2. The fuser pressure release sensor does not turn off even passing 10s after starting the fuser pressure decrease.

Step	Check description	Assumed cause	Measures	Reference
1	Removing a piece of paper	A piece of paper resides in the fuser unit and the fuser pressure release does not operate properly.	Remove a piece of paper remaining in the fuser unit.	
2	Checking the fuser pressure release operation	The fuser press-release does not operate properly.	Manually reverse-rotate the fuser gear to check if the fuser pressure is decreased. If not, replace the fuser unit.	
3	Reattaching the fuser pressure release sensor	The fuser press-release sensor is not properly attached.	Check the fuser pressure release sensor is photo-interrupted by the actuator when decreasing the pressure. If not, reattach the fuser pressure release sensor.	
4	Checking the connection	The connector is not properly connected or the wire is faulty.	Clean the terminal of the following wire connectors and reconnect the connectors. If there is no continuity, replace the wire. • Fuser unit (Fuser pressure release sensor) - Main/engine PWB (YC19) • Fuser pressure release motor - Main/engine PWB (YC1)	
5	Replacing the fuser pressure release motor	The fuser pressure release motor does not operate properly.	Replace the fuser pressure release motor.	
6	Replacing the fuser unit	The internal parts of the fuser unit such as the fuser press-release sensor are faulty.	Replace the fuser unit.	

Step	Check description	Assumed cause	Measures	Reference
7	Replacing the main/engine PWB	The main/engine PWB is faulty.	Replace the main/engine PWB.	

C6650: Thermopile EEPROM error

The thermopile EEPROM cannot be accessed.

Step	Check description	Assumed cause	Measures	Reference
1	Changing the external power source	The power supply voltage reduces.	If the supply power voltage drops exceeding 10% of rated voltage or multiple tap is used, change the power supply.	
2	Checking the connection	The connector is not properly connected or the wire is faulty.	Clean the terminal of the following wire connectors and reconnect the connectors. If there is no continuity, replace the wire. • Thermopile - Main/engine PWB (YC2)	
3	Replacing the thermopile	The thermopile is faulty.	Replace the thermopile.	
4	Replacing the main/engine PWB	The main/engine PWB is faulty.	Replace the main/engine PWB.	

C7001: Wall motor error

Target: 35 ppm model (For Russia only)

An excessive electric current was detected for 1 sec while driving the wall motor.

Step	Check description	Assumed cause	Measures	Reference
1	Resetting the main power	A load was temporarily applied to the wall motor drive.	Turn off the power switch and unplug the power cord. After 5s passes, reconnect the power cord and turn on the power switch.	
2	Checking the connection	The connector is not properly connected or the wire is faulty.	Clean the terminal of the following wire connectors and reconnect the connectors. If there is no continuity, replace the wire. • Wall motor - Main/engine PWB (YC21)	
3	Checking the driving parts	The wall motor drive parts do not operate properly.	If the gears in the wall motor drive section do not rotate smoothly, clean the drive parts such as the bushing or gear and apply grease to them. If the drive parts are broken, replace the parts.	
4	Replacing the wall motor	The wall motor is faulty.	Replace the wall motor.	

C7220: Broken in-machine thermistor

The in-machine thermistor input sampling value exceeds the reference value.

Step	Check description	Assumed cause	Measures	Reference
1	Checking the connection	The connector is not properly connected or the wire is faulty.	Clean the terminal of the following wire connectors and reconnect the connectors. If there is no continuity, replace the wire. • In-machine temperature sensor - Main/engine PWB (YC1)	
2	Replacing thein-machine temperature sensor	The in-machine temperature sensor is faulty.	Replace the in-machine temperature sensor.	
3	Replacing the main/engine PWB	The main/engine PWB is faulty.	Replace the main/engine PWB.	

C7800: Outer thermistor broken

The temperature/humidity sensor (external thermistor) input sampling value exceeds the reference value.

Step	Check description	Assumed cause	Measures	Reference
1	Checking the connection	The connector is not properly connected or the wire is faulty.	Clean the terminal of the following wire connectors and reconnect the connectors. If there is no continuity, replace the wire. • Temperature/humidity sensor - Main/engine PWB (YC2)	
2	Replacing the temperature/humidity sensor	Temperature/humidity sensor is faulty.	Replace the temperature/humidity sensor.	
3	Replacing the main/engine PWB	The main/engine PWB is faulty.	Replace the main/engine PWB.	

C7990: Waste toner full

The waste toner sensor detected the waste toner box in the drum unit full.

Step	Check description	Assumed cause	Measures	Reference
1	Replacing the drum unit	The waste toner reservoir in the drum unit is full.	Replace the drum unit if not recovered after turning the power off and on.	
2	Checking the connection	The connector is not properly connected or the wire is faulty.	Clean the terminal of the following wire connectors and reconnect the connectors. If there is no continuity, replace the wire. • Waste toner sensor - Main/engine PWB (YC2)	
3	Replacing the waste toner sensor	The waste toner sensor is faulty.	Replace the waste toner sensor.	
4	Replacing the main/engine PWB	The main/engine PWB is faulty.	Replace the main/engine PWB.	

(2) System Error (Fxxxx) Outline

(2-1) System Error code list

Error code	Contents
F000	Communication error between the main unit and CPU
F010	Program read error
F020	RAM read / write error
F040	Communication error between the main unit and CPU (Communication error between the controller and the print engine)
F050	Engine main program error

(2-2) Content of System Error (Fxxxx) Outline

F000: Communication error between the main unit and CPU

The panel cannot be detected since the CPU communication between the main/engine PWB and the operation panel PWB is unavailable.

Step	Check description	Assumed cause	Measures	Reference
1	Resetting the main power	The controller does not activate properly.	Turn off the power switch and unplug the power cord. After 5s passes, reconnect the power cord and turn on the power switch.	
2	Checking the connection	The connector is not properly connected or the wire is faulty.	Clean the terminal of the following wire connectors and reconnect the connectors. If there is no continuity, replace the wire. • TSI model: Operation panel PWB (YC6) - Main/engine PWB (YC507) • LCD model: Operation panel PWB (YC2) - Main/engine PWB (YC507)	
3	Checking the expansion memory	The expansion memory is not properly connected.	Clean the expansion memory and reconnect it to the main/engine PWB	
4	Executing U021	The backup RAM data is faulty.	Execute U021 to initialize the backup RAM data.	
5	Replacing the main/engine PWB	The main/engine PWB is faulty.	Replace the main/engine PWB.	
6	Replacing the operation panel PWB	The operation panel PWB is faulty.	Replace the operation panel PWB.	

F010: Program read error

The garbled 2bit data was detected during the program read from the flash memory.

Step	Check description	Assumed cause	Measures	Reference
1	Resetting the main power	The program does not start up properly.	Turn off the power switch and unplug the power cord. After 5s passes, reconnect the power cord and turn on the power switch.	

Step	Check description	Assumed cause	Measures	Reference
2	Executing U021	The backup RAM data is faulty.	Execute U021 to initialize the backup RAM data.	
3	Replacing the main/engine PWB	The main/engine PWB is faulty.	Replace the main/engine PWB.	

F020: RAM read / write error

The error appears during the reading/writing check of the RAM for the CPU when the main unit starts up.

Step	Check description	Assumed cause	Measures	Reference
1	Resetting the main power	The program does not start up properly.	Turn off the power switch and unplug the power cord. After 5s passes, reconnect the power cord and turn on the power switch.	
2	Executing U021	The backup RAM data is faulty.	Execute U021 to initialize the backup RAM data.	
3	Replacing the main/engine PWB	The main/engine PWB is faulty.	Replace the main/engine PWB.	

F040: Communication error between the main unit and CPU (Communication error between the controller and the print engine)

The communication between the controller and the print engine is faulty.

Step	Check description	Assumed cause	Measures	Reference
1	Resetting the main power	The communication between the controller and the print engine is faulty.	Turn off the power switch and unplug the power cord. After 5s passes, reconnect the power cord and turn on the power switch.	
2	Firmware upgrade	The firmware is not the latest version.	Upgrade the main firmware and the engine firmware to the latest version.	
3	Replacing the main/engine PWB	The main/engine PWB is faulty.	Replace the main/engine PWB.	

F050: Engine main program error

The engine program cannot start up.

Step	Check description	Assumed cause	Measures	Reference
1	Resetting the main power	The print engine ROM checksum is faulty.	Turn off the power switch and unplug the power cord. After 5s passes, reconnect the power cord and turn on the power switch.	
2	Firmware upgrade	The firmware is not the latest version.	Upgrade the engine firmware to the latest version	
3	Reinstalling the EEPROM	The EEPROM is not properly attached.	Reattach the EEPROM to the main/engine PWB.	

Step	Check description	Assumed cause	Measures	Reference
4	Replacing the main/engine PWB	The main/engine PWB is faulty.	Replace the main/engine PWB.	

(3) System Error (Fxxxx) Outline

The document is described for the outline of the factors of the Fxxx errors that are not described in the self-diagnosis error code list.
Please utilize it as the measures when the system is not recovered after power off/on or it frequently occurs.

*: Please initially check the following when the error (Fxxx) is indicated.
- Check the DIMM (DDR memory) and neighboring parts: Check the contact on the control PWB by releasing and reinserting the DIMM.
If the error repeats after that, replace the DIMM.

*: Power is partially supplied to this machine when the power is turned off.
Unplug the power plug and check if the F-code error is not released when passing one minute or more after turning the power off and then on.

Number	Contents	Verification procedure & check point	Remarks	LED model
-	It locks on a Welcome screen.It locks on a starting logo (Taskalfa/Ecosys) screen.(Even if time passes for a definite period of time in more than * notes, a screen does not change)	(1) Check the harness of the connection state of a connector between Panel<=>Main/Engine PWBs, and perform an operation check. (2) Check contact of a DDR memory (extracting) and perform an operation check. If exchangeable, it will exchange and will perform an operation check. (3) Exchange a Panel PWB and perform an operation check. (4) Exchange a Main/Engine PWB and perform an operation check. (5) It will get, if USBLOG is obtainable, and contact service headquarters.	* Execution of U024 will vanish user data and the software installed. Reinstallation is required.	[Main<=>Panel I/F] Main/Engine PWB: YC507 Panel PWB: YC1
F000	CF000 will be displayed if * notes progress is carried out for a definite period of time with a Welcome screen.The communication fault between Panel-Main/Engine PWBsCommunication fault between Panel Core-Main Core	(1) Check the harness of the connection state of a connector between Panel<=>Main/Engine PWBs, and perform an operation check. (2) Check contact of a DDR memory (extracting) and perform an operation check. If exchangeable, it will exchange and will perform an operation check. (3) Exchange a Main/Engine PWB and perform an operation check. (4) Exchange a Panel PWB and perform an operation check. (5) It will get, if USBLOG is obtainable, and contact service headquarters.		
F15X	Abnormality detecting in an authentication device control section	(1) Check the harness between authentication device <=>Main/Engine PWBs, and the connection situation of a connector, and perform an operation check. (2) Exchange a Main/Engine PWB and perform an operation check. (3) Get USBLOG and contact service headquarters.	Authentication device: IC card reader etc.	[Main unit<=>Authentication device] USB Host connector [Main/Engine PWB<=>USB connector] Main/Engine PWB: YC510
F18X	Abnormality detecting in a Video control section	(1) Check the harness between Engine<=>Main/Engine PWBs, and the connection state of a connector, and perform an operation check. (2) Exchange an Engine board and perform an operation check. (3) Exchange a Main/Engine PWB and perform an operation check. (4) Get USBLOG and contact service headquarters.		Main/Engine PWB: YC1, YC2, YC3, YC5, YC6, YC7, YC9, YC10, YC14, YC21, YC23
F1DX	Abnormality detecting of the image memory Management Department	(1) Exchange a Main/Engine PWB and perform an operation check. (2) Get USBLOG and contact service headquarters.		[Main/Engine PWB] There are no hardware components that can be checked in the field
F21X, F22X, F23X	Abnormality detecting in an image-processing part	(1) Check contact of a DDR memory and perform an operation check. (2) Exchange a Main/Engine PWB and perform an operation check. (3) Get USBLOG and contact service headquarters.		[Main/Engine PWB] There are no hardware components that can be checked in the field

Number	Contents	Verification procedure & check point	Remarks	LED model
F24X	Abnormality detecting in the system Management Department	(1) Check contact of a DDR memory and perform an operation check. (2) Exchange a Main/Engine PWB and perform an operation check. (3) Get USBLOG and contact service headquarters.	* F248 is the abnormalities of a printer process.In recurring by specific printer data, please give me cooperation at acquisition of capture data and USBLOG.	[Controller failure] Cleared by turning power off and on onlyUSB log is required for investigation [Main/Engine PWB] There are no hardware parts that can be checked in the field
F25X	Abnormality detecting in a network management department	(1) Exchange a Main/Engine PWB and perform an operation check. (2) Get USBLOG and packet capture and contact service headquarters.	* It may occur according to a visitor's network environment.	[Main unit<=>Outside network] Ethernet connector
F26X, F27X, F28X, F29X, F2AX	Abnormality detecting in the system Management Department	(1) Exchange a Main/Engine PWB and perform an operation check. (2) Get USBLOG and contact service headquarters.		(SSM:F26X) [Main/Engine PWB] There are no hardware parts that can be checked in the field
F2BX, F2CX, F2DX, F2EX, F2FX, F30X, F31X, F32X	Abnormality detecting in a network control part	(1) Exchange a Main/Engine PWB and perform an operation check. (2) Get USBLOG and contact service headquarters.(Depending on an analysis result, it is packet capture acquisition)		[Main unit<=>Outside network] Ethernet connector
F35X	Abnormality detecting in the printing controlling Management Department	(1) Exchange a Main/Engine PWB and perform an operation check. (2) Get USBLOG and contact service headquarters.		[Main/Engine PWB<=>Video device] Main/Engine PWB: YC1, YC2, YC3, YC5, YC6, YC7, YC9, YC10, YC14, YC21, YC23
F38X	Abnormality detecting in the authentication authorized Management Department	(1) Exchange a Main/Engine PWB and perform an operation check. (2) Get USBLOG and contact service headquarters.		[Main unit<=>Authentication device] USB Host connector [Main/Engine PWB<=>USB connector] Main/Engine PWB: YC510
F3AX, F3BX, F3CX, F3DX, F3EX, F3FX, F40X, F41X, F42X, F43X, F44X, F45X	Abnormality detecting in the Entity Management Department	(1) Exchange a Main/Engine PWB and perform an operation check. (2) Get USBLOG and contact service headquarters.		[Main/Engine PWB] There are no hardware components that can be checked in the field

Number	Contents	Verification procedure & check point	Remarks	LED model
F46X	Abnormality detecting of a printer rendering part	(1) Exchange boards and perform an operation check. (2) the acquisition wish of USBLOG -- carry out (Depending on the (2) case, it is print capture data acquisition)	* F46F is the abnormalities of a printer process.In recurring by specific printer data, please give me cooperation at acquisition of capture data and USBLOG.	Support [Main/Engine PWB] There are no hardware components that can be checked in the field
F47X	Abnormality detecting of an image editing processing part	(1) Exchange a Main/Engine PWB and perform an operation check. (2) Get USBLOG and contact service headquarters.		(F47X) Not Support(F48X) Not Support(F49X) [Main/Engine PWB]There are no hardware components that can be checked in the field
F4DX, F4EX	Abnormality detecting in the Entity Management Department	(1 Exchange a Main/Engine PWB and perform an operation check. (2) Get USBLOG and contact service headquarters.		Support(F4DX) [Main/Engine PWB] There are no hardware parts that can be checked in the field
F4FX	Abnormality detecting in the JOB Management Department	(1) Exchange a Main/Engine PWB and perform an operation check. (2) Get USBLOG and contact service headquarters.	Since the USB log immediately after occurrence is needed for analysis, please give me cooperation of acquisition.	Support [Main/Engine PWB] There are no hardware components that can be checked in the field
F51X, F52X, F53X, F55X, F56X, F57X	Abnormality detecting in a JOB execution part	(1) Exchange a Main/Engine PWB and perform an operation check. (2) Get USBLOG and contact service headquarters.	Since the USB log immediately after occurrence is needed for analysis, please give me cooperation of acquisition.	Support [Main/Engine PWB] There are no hardware components that can be checked in the field
F5FX	Abnormality detecting in a service execution part	(1) Exchange a Main/Engine PWB and perform an operation check. (2) Get USBLOG and contact service headquarters.	Since the USB log immediately after occurrence is needed for analysis, please give me cooperation of acquisition.	Support [Main/Engine PWB] There are no hardware components that can be checked in the field
F62X	Abnormality detecting in a service execution part	(1) Exchange a Main/Engine PWB and perform an operation check. (2) Get USBLOG and contact service headquarters.	Since the USB log at the time of occurrence is needed for analysis, please give me cooperation of acquisition.	[Main/Engine PWB] There are no hardware components that can be checked in the field
F63X	Abnormality detecting in a device control section	(1) Exchange a Main/Engine PWB and perform an operation check. (2) Get USBLOG and contact service headquarters.		Support [Main/Engine PWB] There are no hardware components that can be checked in the field

7-4 Print Errors

No.	Contents	Condition
(1)	The paper loading message appears	
(2)	The paper direction is incorrect	
(3)	Paper is fed from the MP tray	
(4)	Garbled characters	The printer driver was not properly installed.
(5)	Data is output in monochrome	Photos printed from a PC are monochrome instead of color. (Print from Windows Photo Viewer)
(6)	Paper is not fed from the MP tray	MP tray setting is unmatched between the main unit side and PC side.
(7)	The same data is printed out endlessly	A PC (spooler) does not properly operate.
(8)	[Print Job Error] or [Printing Queue] is displayed on the PC screen and [Printer Unavailable] on the printer properties.	The main unit is not ready to print
(9)	Printer Pending message is displayed but [Processing] or [Memory] lamp turns on on the operation panel.	The main unit locks up.
(10)	Output is unavailable in sleep mode due to the main unit startup failure [Processing] or [Memory] lamp turns on on the operation panel.	The main unit locks up.
(11)	Print stops and operation lock after printing several pages. No error is displayed and if directing print, it is on hold.	The entire machine is locked up since image processing is unavailable from memory shortage.
(12)	Print out is not available from the network factor (1)	There is trouble in network or network setting is not proper.
(13)	Print out is not available from the network factor (2)	The cable between the main unit and the PC is not properly connected.
(14)	Print out is not available from the network factor (3)	The access point (router or hub) in the network does not operate properly.
(15)	Print out is not available from the network factor (4)	The router is faulty or the router setting is not proper.
(16)	Print out is not available from the network factor (5)	"Offline" appears and the print function is unavailable.
(17)	Print out is not available from the network factor (6)	Only one among installed PCs is unable to print. No error is displayed and if directing print, it is on hold.
(18)	Print out is not available from the network factor (7)	The main unit IP address is changed.
(19)	Print out is not available from the printer driver setting factor (1)	[Not connected] is displayed on the PC and a print job cannot be executed by error. Or [Preparing] is displayed at the main unit and jobs reside without output.
(20)	Print out is not available from the printer driver setting factor (2)	A PC does not recognize the main unit.

No.	Contents	Condition
(21)	Print out is not available from the printer driver setting factor (3)	PC operation does not stabilize.
(22)	Print out is not available from the printer driver setting factor (4)	Printer port supporting the network print is not selected or not set up properly.
(23)	Print out is not available from the printer driver setting factor (5)	The incorrect printer driver was selected.
(24)	Print out is not available from the printer driver setting factor (6)	Installed printer driver shows "Deleting" and it remains when reinstalling it
(25)	A part of the image is missing	The image data processing with a certain application (Excel, PDF, etc.) is faulty.
(26)	"Paper Mismatch Error" appears	The paper size is not detected properly.

Content of Print Errors

(1) The paper loading message appears

Step	Check description	Assumed cause	Measures	Reference
1	Changing paper	Paper size is unmatched between the PC side output size and cassette side paper size.	Load the paper in the paper source of the size which is set at [Output Size] in [Printer Setting] > [Basis Setting] at the PC.	
2	Changing the settings	Paper size displayed on the operation panel unmatched the size sent in the cassette.	Check if the paper size displayed on the operation panel matches the size of paper loaded in the paper source. If not, change the paper size in the system menu.	
3	Re-setting the guide	The guide is not aligned to the paper size.	Align the paper width guide, paper guide (MP tray) or PF paper width guide (paper feeder) to the paper size and reload paper.	
4	Checking the actuator and the spring	The paper sensor does not operate properly.	The actuator or spring for the paper sensor, MP paper sensor or PF paper sensor is deformed or does not operate properly, replace it.	
5	Checking the situation	The print data generated by a certain application (Word, etc.) is faulty.	Check if the print data not generated by a certain application (Word, etc.) is output properly. And then, change the application setting if necessary.	
6	Changing the settings	[Orientation] is not set properly.	Check the orientation with the preview before print and change the orientation at [Orientation] in the page layout setting of the certain application (Word, etc.).	

Step	Check description	Assumed cause	Measures	Reference
7	(When feeding from the MP tray) Changing the setting	Paper size and media type at the main unit side unmatched the output size and media type set at the PC side.	If [Paper Size] and [Media Type] for the MP tray set the main unit unmatched [Output Size] and [Media Type] respectively set at [Printer Properties] > [Preferences] of the PC setting [Paper Source: MP tray], change the main unit setting to match the PC.	

(2) The paper direction is incorrect

Step	Check description	Assumed cause	Measures	Reference
1	Resetting the main power	There is a communication error.	Check if there is no job in process in the PC and main unit. Next, turn the main unit power off and disconnect the power cord. After 5s, reconnect the power cord and turn the power on.	
2	Checking the font list	Font for special data is not resident.	After confirming Excel or Word output is normal, output Font List to check fonts for special data are resident.	
3	Selecting the bitmap font	The bitmap font (default setting) is unselected.	Select the bitmap font (default setting) and print the data.	
4	Reinstalling the printer driver	The printer driver is faulty.	Uninstall and reinstall the printer driver.	

(3) Paper is fed from the MP tray

Step	Check description	Assumed cause	Measures	Reference
1	(TSI model) Changing the setting	[Auto Cassette] is set to [On].	To prevent paper feed in case no paper is available in the cassette selected, change [Auto Cassette Switching] to [Off].	
2	(LCD model) Changing the setting	[Auto Cassette] is set to [On].	To prevent paper feed in case no paper is available in the cassette selected, change [Auto Cassette Switching] to [Off].	
3	Changing the settings	[Media type] at the PC side is different from the one at the main unit.	Check the media type setting of the main unit cassette and MP tray. Next, change [Media Type] at the PC side in [Printer Properties] > [Preferences] to match the main unit setting.	
4	Changing the settings	[Media type] setting of the main unit cassette and MP tray is same.	Set the different media types for the cassette and the MP tray at the main unit.	

(4) Garbled characters

The printer driver was not properly installed.

Step	Check description	Assumed cause	Measures	Reference
1	Resetting the main power	There is a communication error.	Check if there is no job in process in the PC and main unit. Next, turn the main unit power off and disconnect the power cord. After 5s, reconnect the power cord and turn the power on.	
2	Checking the font list	Font for special data is not resident.	After confirming Excel or Word output is normal, output Font List to check fonts for special data are resident.	
3	Selecting the bitmap font	The bitmap font (default setting) is unselected.	Select the bitmap font (default setting) and print the data.	
4	Reinstalling the printer driver	The printer driver is faulty.	Uninstall and reinstall the printer driver.	

(5) Data is output in monochrome

Photos printed from a PC are monochrome instead of color. (Print from Windows Photo Viewer)

Step	Check description	Assumed cause	Measures	Reference
1	Checking the settings	The [Color Mode] setting in the [Imaging] tab in the print settings at the PC is incorrect.	Check the color mode in the [Imaging tab] in the print settings at the PC and change to "Full color" if the color mode was set to "Black".	
2	Checking the settings	The option or printer properties are not properly set up	Change [Color Mode] to [Full Color] from Page Setting of special application, Excel, etc.	
3	Changing the printing method	The application is incompatible.	Directly print JPEG data instead of pasting it on Excel, etc.	

(6) Paper is not fed from the MP tray

MP tray setting is unmatched between the main unit side and PC side.

Step	Check description	Assumed cause	Measures	Reference
1	Changing the settings	Paper size and media type at the main unit side unmatched the output size and media type set at the PC side.	If [Paper Size] and [Media Type] for the MP tray set the main unit unmatched [Output Size] and [Media Type] respectively set at [Printer Properties] > [Preferences] of the PC setting [Paper Source: MP tray], change the main unit setting to match the PC.	

(7) The same data is printed out endlessly

A PC (spooler) does not properly operate.

Step	Check description	Assumed cause	Measures	Reference
1	Cancelling the job	The generated data is faulty.	Cancel print jobs spooled by PC and reprint them.	

(8) [Print Job Error] or [Printing Queue] is displayed on the PC screen and [Printer Unavailable] on the printer properties.

The main unit is not ready to print

Step	Check description	Assumed cause	Measures	Reference
1	Clearing the error	The main unit is not ready to print	Check if an error is displayed on the operation panel or [Attention] lamp turns on and clear the error if necessary.	

(9) Printer Pending message is displayed but [Processing] or [Memory] lamp turns on the operation panel.

The main unit locks up.

Step	Check description	Assumed cause	Measures	Reference
1	Resetting the main power	The main unit is not ready to print	After confirming no error is displayed on the operation panel, cancel print jobs from all the PCs. Next, turn the power off and disconnect the power cord. When passing 5s, reconnect the power cord and turn the power on.	

(10)Output is unavailable in sleep mode due to the main unit startup failure [Processing] or [Memory] lamp turns on the operation panel.

The main unit locks up.

Step	Check description	Assumed cause	Measures	Reference
1	Firmware upgrade	The firmware is not the latest version.	Upgrade the firmware to the latest version.	
2	Changing the settings	The sleep level is not set to Quick Recovery mode.	Turn off the power switch and unplug the power cord. After 5s passes, reconnect the power cord and turn on the power switch. After that, set the Sleep Level to Quick Recovery.	

(11)Print stops and operation lock after printing several pages. No error is displayed and if directing print, it is on hold.

The entire machine is locked up since image processing is unavailable from memory shortage.

Step	Check description	Assumed cause	Measures	Reference
1	Resetting the main power	The main unit locks up.	If the operation panel or the buttons are not active, turn off the power switch and unplug the power cord. After passing 5s, reconnect the power cord and turn on the power switch.	
2	Checking the situation	The data processing in a certain PC is faulty.	Check if it occurs with print from other PC in the network. If it only occurs at the certain PC, print from other PC.	
3	Changing the settings	The application is not properly set.	Check if it occurs with the certain application or file (large size file such as CAD data) and change the setting of the application or refer to Help of the application.	
4	Firmware upgrade	The firmware is not the latest version.	Upgrade the main firmware to the latest version.	
5	Cancelling the job	Processing fails.	Cancel the job in process in the main unit job status and reprint it.	

(12)Print out is not available from the network factor (1)

There is trouble in network or network setting is not proper.

Step	Check description	Assumed cause	Measures	Reference
1	Cancelling the job	There is trouble in the network.	Check if the [Memory] lamp on the operation panel of the main unit is blinking. If not, cancel the job in process and reprint it.	
2	Executing the error correction	There is trouble in the network.	If a print error is displayed on the operation panel or PC screen, clear the error such as toner related and paper jam.	
3	Re-setting the network	There is trouble in the network.	Check the main unit IP address with the user status page, etc. and check if Command Center can be opened with the IP address. If not, reconfigure the network.	
4	Checking the network	There is trouble in the network.	Check if the internet connection is available. If not, repair the network connection.	
5	Restarting up	There is trouble in the network.	Reconnect the network cable and restart the router or hub (concentrator).	
6	Restarting up	The PC or the main unit locks up.	Restart the PC or main unit to reprint.	

(13)Print out is not available from the network factor (2)

The cable between the main unit and the PC is not properly connected.

Step	Check description	Assumed cause	Measures	Reference
1	Checking the connection	The network cable is not connected properly.	Reconnect the network cable in between the main unit and PC.	
2	Restarting up	The main unit or the PC does not properly start up.	Restart the main unit and then restart the PC.	
3	Replacing the Ethernet cable	The Ethernet cable is faulty.	Replace the Ethernet cable.	
4	Changing the connection	Another network is faulty.	Directly connect the main unit to the PC with the cross cable, and then check if the same data can be printed out.	

(14)Print out is not available from the network factor (3)

The access point (router or hub) in the network does not operate properly.

Step	Check description	Assumed cause	Measures	Reference
1	Restarting up	The router or the hub does not properly activate.	Check if the link lamp of the router or hub (concentrator) turns on and restart it.	
2	Reconnecting the Ether-net cable	The Ethernet cable is not connected properly.	If the link lamp turns off, disconnect and reconnect the Ethernet cable to the router and check if it turns on.	
3	Replacing the Ethernet cable	The Ethernet cable is faulty.	Replace the Ethernet cable.	
4	Restarting up	The router, hub, PC or the main unit do not start up properly.	If the link lamp turns on but network connection is unavailable, restart the router or hub (concentrator), and restart the PC and main unit.	

(15)Print out is not available from the network factor (4)

The router is faulty or the router setting is not proper.

Step	Check description	Assumed cause	Measures	Reference
1	Correcting the IP address	The IP address is not prop-erly set.	Check if the main unit IP address dis-played on the status page and system menu matches the one at the [Port] tab of [Printer Properties] of the PC. If not, correct the IP address at the PC.	
2	Correcting the printer host name	The printer host name is not properly set.	In case of the server environment, check the printer hostname. Next, check the hostname at the [Port] tab of [Printer Properties]. If different, correct the PC side.	

(16)Print out is not available from the network factor (5)

"Offline" appears and the print function is unavailable.

Step	Check description	Assumed cause	Measures	Reference
1	Repairing the network connection	There is trouble in the network.	Check if the internet is available. Improve the network connection if not available.	
2	Restarting up	The PC malfunctions.	When "Offline" appears on the printer driver, check if it is used in the pause or offline. Then, restart up the PC.	
3	Changing the settings	The application is not properly set.	Check if the other data such as Excel, Word, etc. can be output and change the setting of the application.	
4	Correcting the IP address	The IP address is not properly set.	Check if the main unit IP address displayed on the status page and system menu matches the one at the [Port] tab of [Printer Properties] of the PC. If not, correct the IP address at the PC.	
5	Correcting the IP address	The IP address is not properly set.	Check if Command Center or communication via PING is available with the IP address set up. Then, correct the IP address if necessary and restart the main unit.	
6	Changing the settings	The port settings in the printer properties at the PC are incorrect.	Uncheck [Bidirectional Support] and [SNMP Status} at the [Port] tab of [Printer Properties] of the PC, and restart the main unit and PC.	
7	Restarting up	The main unit does not start up properly.	Check if test print is available after the printer becomes Ready and restart the main unit.	

(17)Print out is not available from the network factor (6)

[Condition]

- **PC OS: Windows7**
- **Print file: Test Page**
- **Connection: Wireless LAN**

Only one among installed PCs is unable to print. No error is displayed and if directing print, it is on hold.

Step	Check description	Assumed cause	Measures	Reference
1	Restarting up	The main unit or PC does not start up properly.	Restart the main unit or PC.	
2	Checking the connection	The network cable is not connected properly.	Re-connect the network cable.	

Step	Check description	Assumed cause	Measures	Reference
3	Correcting the IP address	The IP address is not properly set.	Check if the main unit IP address displayed on the status page and system menu matches the one at the [Port] tab of [Printer Properties] of the PC. If not, correct the IP address at the PC.	
4	Checking the router / hub	There is trouble in the network.	Check if access via command center or PING is available and then check the hub or router.	
5	Checking the settings	The printer port IP address, the SNMP of the printer driver, or the bi-directional support is not properly set.	Correct the IP address at the [Port] tab of [Printer Properties] of the PC, disable [SNMP Status] and [Bidirectional Support] and restart.	
6	Checking the security software	The restriction of the security software causes the phenomenon.	Check if printing is available by uninstalling the security software or set [Exception].	

(18)Print out is not available from the network factor (7)

The main unit IP address is changed.

Step	Check description	Assumed cause	Measures	Reference
1	Restarting up	There is trouble in the network.	If occurring in all the PC in the network, restart the router or hub (concentrator).	
2	Checking the connection	The network cable is not connected properly.	Re-connect the network cable.	
3	Resetting the main power	The main unit does not start up properly.	Turn off the power switch and unplug the power cord. After 5s passes, reconnect the power cord and turn on the power switch.	
4	Correcting the IP address	IP address was changed.	Check if the main unit IP address displayed on the status page and system menu matches the one at the [Port] tab of [Printer Properties] of the PC. If not, correct the IP address at the PC.	
5	Changing the settings	The main unit network is not set to the static IP address.	Set the network to static IP address in the system menu.	

(19)Print out is not available from the printer driver setting factor (1)

[Condition]

- **PC OS: Windows7**
- **Print file: Test Page**
- **Connection: Wireless LAN**

[Not connected] is displayed on the PC and a print job cannot be executed by error.
Or [Preparing] is displayed at the main unit and jobs reside without output.

Step	Check description	Assumed cause	Measures	Reference
1	Cancelling the job	Faulty print jobs remain.	Cancel print jobs residing in the printer driver.	

(20)Print out is not available from the printer driver setting factor (2)

A PC does not recognize the main unit.

Step	Check description	Assumed cause	Measures	Reference
1	Checking the settings	The printer driver is not properly set.	Check if the printer icon of the PC is [Ready] (Execute Troubleshooting by right-clicking the printer icon).	
2	Installing the printer driver	The printer driver is faulty.	Uninstall and reinstall the printer driver.	
3	Restarting up	The PC does not start up properly.	Restart up the PC.	
4	Upgrading the printer driver	The printer driver is not the latest version.	Upgrade the printer driver.	

(21)Print out is not available from the printer driver setting factor (3)

PC operation does not stabilize.

Step	Check description	Assumed cause	Measures	Reference
1	Restarting the PC	Multiple application softwares are started up or available PC memory is short.	Restart up the PC.	

(22)Print out is not available from the printer driver setting factor (4)

Printer port supporting the network print is not selected or not set up properly.

Step	Check description	Assumed cause	Measures	Reference
1	Correcting the IP address	The IP address is not properly set.	Check if the main unit IP address displayed on the status page and system menu matches the one at the [Port] tab of [Printer Properties] of the PC. If not, correct the IP address at the PC.	

(23)Print out is not available from the printer driver setting factor (5)

The incorrect printer driver was selected.

Step	Check description	Assumed cause	Measures	Reference
1	Installing the printer driver	The incorrect printer driver is selected.	Select the proper printer driver. If there is no proper it on the PC, install the printer driver which supports the main unit of the destination of outputting the data.	

(24)Print out is not available from the printer driver setting factor (6)

Installed printer driver shows "Deleting" and it remains when reinstalling it

Step	Check description	Assumed cause	Measures	Reference
1	Cancelling the job	The print jobs remain in the spool inside the printer driver.	Cancel all the print jobs spooled in the printer driver.	
2	Uninstalling the printer driver	There is the unused printer driver.	Delete the unused printer driver.	
3	Restarting the print	The system is pausing.	Right click the pausing printer icon and select [Print resuming]. Then, check the ready port.	
4	Correcting the IP address	The IP address is not properly set.	If local network is connected, check the main unit IP address with status page. next, correct the IP address at the [Port] tab of [Printer Properties] of the PC.	
5	Adding the Standard TCP/IP port	No Standard TCP/IP port is available for the main unit IP address.	Add the main unit IP address in Standard TCP/IP port and print Test Page	

(25)A part of the image is missing

The image data processing with a certain application (Excel, PDF, etc.) is faulty.

Step	Check description	Assumed cause	Measures	Reference
1	Referring to Help	The image data processing with a certain application (Excel, PDF, etc.) is faulty.	When the phenomenon occurs with a certain file only, check if there is an abnormality in the image data.	
2	Referring to Help	The data processing with a certain application (Excel, PDF, etc.) is faulty.	Check if the image does not drop out on the print preview, and refer to the Help in the application if necessary.	
3	Changing the settings	The PDL settings is incorrect.	Select "GDI compatible mode" at [PDL settings] in the print settings at the PC.	
4	Firmware upgrade	The firmware is not the latest version.	Upgrade the main firmware to the latest version.	

(26)"Paper Mismatch Error" appears

The paper size is not detected properly.

Step	Check description	Assumed cause	Measures	Reference
1	(When feeding from the MP tray) Changing the setting	The paper size for the MP tray is not properly set.	Select [MP tray] in [Printer Properties] > [Preferences] > [Source] and set [Print size] at the PC side.	
2	(When feeding from the MP tray) Re-setting the paper guide	The paper guide is not aligned to the paper size.	Align the paper guide to the paper size and reload paper.	
3	(When feeding from the MP tray) Changing the setting	Paper size is not set properly.	Set the MP tray paper size from the system menu.	
4	Changing the settings	"Paper Mismatch Error" is set to [Display Error].	Set to [Continue] at [Paper Mismatch].	

7-5 Error Messages

No.	Contents
(1)	The [Add Paper] message appears while the paper is loaded on the MP tray

Content of Error Messages

(1) The [Add Paper] message appears while the paper is loaded on the MP tray

Step	Check description	Assumed cause	Measures	Reference
1	Checking the connection	The connector is not properly connected or the wire is faulty.	Clean the terminal of the following wire connectors and reconnect the connectors. If there is no continuity, replace the wire. • MP paper sensor - Main/engine PWB (YC6)	
2	Replacing the actuator	The actuator is deformed.	Replace the MP paper sensor actuator.	
3	Checking the MP paper sensor	The MP paper sensor is not properly connected or faulty.	Reattach the MP paper sensor. If not repaired, replace it.	
4	Checking the main/engine PWB	The connector and FFC are not connected properly or the wire, FFC or PWB is faulty.	Reconnect the connector and FFC that are connected to the main/engine PWB. If the wire is pinched or scratched, or the FFC terminal is peel or deformed, correct or replace it. If not repaired, replace the main/engine PWB.	

7-6 Abnormal Noise

No.	Contents	Condition
(1)	Abnormal sound (basic treatment)	
(2)	Abnormal sounds from the paper conveying section	The conveying rollers, pulleys and gears are worn down, dirty or foreign objects adhere to them
(3)	Abnormal sound from the developer section	Caused by the developer unit.
(4)	Abnormal sound from the document processor	The DP conveying section is worn down, dirty, not attached properly or foreign objects adhere to it
(5)	Abnormal sound from the exit section	The exit section is dirty or foreign objects adhere to it
(6)	Abnormal sound from the primary paper feed section	The primary feed section is worn down, dirty, not attached properly or foreign objects adhere to it
(7)	Abnormal sound from the machine front side	The MP feed section is worn down, dirty, not attached properly or foreign objects adhere to it
(8)	Abnormal sound from the lower side than the fuser exit section	Friction sound between the lower exit roller bushing and stop ring due to adhesion of dirt and foreign objects
(9)	Abnormal sound from the upper side of the fuser exit section	Friction sound between the lower exit pulley and shaft due to adhesion of dirt and foreign objects
(10)	Abnormal sound from the fuser section	Dirt at the fuser section, foreign object adhesion, contact of parts
(11)	Abnormal sound from inside the machine	Toner shutter open/close failure of the toner container, toner quantity lack, or toner aggregation
(12)	Abnormal sound from inside the machine	Dirt at the developer section, Foreign object adhesion or toner aggregation
(13)	Abnormal sound from inside the machine	Worn, dirt, foreign object adhesion or waste toner clogging at the drum section
(14)	The driving sound is noisy during printing	
(15)	The rotation sound of the fan is noisy	

Content of Abnormal Noise

(1) Abnormal sound (basic treatment)

Step	Check description	Assumed cause	Measures	Reference
1	Applying the grease	Grease to each gear and bushing is not enough.	Check the rotation of the roller, pulley and gear. If not rotating smoothly, apply grease to them.	
2	Checking the gear and the bushing	The parts such as each gear or bushing are not properly attached.	Reattach the gear or bushing, and apply grease.	

(2) Abnormal sounds from the paper conveying section

The conveying rollers, pulleys and gears are worn down, dirty or foreign objects adhere to them

Step	Check description	Assumed cause	Measures	Reference
1	Cleaning and applying the grease	The bushing or the gear is dirty or foreign objects are on them.	Clean conveying roller shafts and gears, and apply grease.	
2	Replacing the bushing	The bushing is worn down.	Replace the conveying roller shafts.	
2	Cleaning and applying the grease	The drive gear is dirty or foreign objects adhere to it.	Clean the main motor drive gear and apply grease to it.	

(3) Abnormal sound from the developer section

Caused by the developer unit.

Step	Check description	Assumed cause	Measures	Reference
1	Checking the developer unit	The developer unit drive is faulty.	Check the following and correct the developer unit if necessary. • Developer power leaks from the developer unit 	
2	Replacing the developer unit	The developer unit is faulty.	Replace the developer unit.	

(4) Abnormal sound from the document processor

The DP conveying section is worn down, dirty, not attached properly or foreign objects adhere to it

Step	Check description	Assumed cause	Measures	Reference
1	Cleaning and applying the grease	The bushing or the gear is dirty or foreign objects are on them.	Clean the bushings and the shafts of the DP conveying roller A, B, and then apply grease to them.	
2	Replacing the bushing	The bushing is worn down.	Replace the bushing.	
3	Cleaning and applying the grease	The drive gear is dirty or foreign objects adhere to it.	Clean the drive gear of the DP feed motor, and apply grease to it.	

(5) Abnormal sound from the exit section

The exit section is dirty or foreign objects adhere to it

Step	Check description	Assumed cause	Measures	Reference
1	Cleaning and applying the grease	The bushing or the gear is dirty or foreign objects are on them.	Clean the upper exit pulley shaft and gear and apply grease to it.	
2	Cleaning and applying the grease	The shaft is dirty or foreign objects adhere to it.	Clean the upper exit pulley and apply grease to it.	
3	Cleaning and applying the grease	The FD guide shaft is dirty or foreign objects adhere to it.	Clean the FD guide shaft and apply grease to it.	

(6) Abnormal sound from the primary paper feed section

The primary feed section is worn down, dirty, not attached properly or foreign objects adhere to it

Step	Check description	Assumed cause	Measures	Reference
1	Checking the gear and the clutch	The parts such as the gear or the clutch are not properly attached.	Reattach the primary paper feed drive parts such as the gear or the clutch if they are not properly attached.	
2	Cleaning and applying the grease	The gear, bushing, etc. are dirty or foreign objects adhere to them.	Clean the primary paper feed drive parts such as the gear or the bushing and apply the grease to them.	
3	Cleaning and applying the grease	The shaft or the bushing is dirty or foreign objects adhere on them.	Clean the shaft and the bushing of the paper feed roller and apply grease to them.	

(7) Abnormal sound from the machine front side

The MP feed section is worn down, dirty, not attached properly or foreign objects adhere to it

Step	Check description	Assumed cause	Measures	Reference
1	Checking the gear and the clutch	The parts such as the gear or the clutch are not properly attached.	When the gears or the clutch in the MP paper feed drive section are not properly attached, reattach them.	
2	Cleaning and applying the grease	The shaft or the bushing is dirty or foreign objects adhere on them.	Clean the shaft and the bushing of the MP paper feed roller and apply the grease to them.	
3	Checking the MP separation pad	The MP separation pad surface is dirty or worn down.	Clean the MP separation pad. Then, replace it if necessary.	
4	Checking the MP bottom plate	The MP bottom plate is not properly attached.	Reattach the MP bottom plate.	

(8) Abnormal sound from the lower side than the fuser exit section

Friction sound between the lower exit roller bushing and stop ring due to adhesion of dirt and foreign objects

Step	Check description	Assumed cause	Measures	Reference
1	Cleaning and applying the grease	The lower exit roller, bushing, stop ring, etc. are dirty or foreign objects adhere to them.	Clean the lower exit roller, bushing, stop ring, etc. and apply heat-resistant grease.	
2	Replacing the fuser unit	The fuser unit is faulty.	Replace the fuser unit.	

Abnormal sound from the upper side of the fuser exit section

Friction sound between the lower exit pulley and shaft due to adhesion of dirt and foreign objects

Step	Check description	Assumed cause	Measures	Reference
1	Cleaning and applying the grease	The pulley or the shaft is dirty, or foreign objects adhere on them.	Clean the lower exit roller and shaft, and apply heat-resistant grease.	

Step	Check description	Assumed cause	Measures	Reference
2	Replacing the fuser unit	The fuser unit is faulty.	Replace the fuser unit.	

(9) Abnormal sound from the fuser section

Dirt at the fuser section, foreign object adhesion, contact of parts

Step	Check description	Assumed cause	Measures	Reference
1	Cleaning and applying the grease	The bushing or the gear is dirty or foreign objects are on them.	Clean the fuser belt, fuser press roller bushing and gear and apply grease.	
2	Cleaning and applying the grease	The shaft is dirty or foreign objects adhere to it.	Clean the lower exit roller and shaft,etc., and apply heat-resistant grease.	
3	Cleaning and applying the grease	The gear is dirty or foreign objects adhere to it.	Clean the fuser drive gear and apply the grease to it.	
4	Applying the grease	The grease is not enough.	Apply the grease to the pressure release cam and the frame.	
5	Replacing the fuser unit	The fuser front guide is warped and contacts the fuser press roller.	Replace the fuser unit.	

(10)Abnormal sound from inside the machine

Toner shutter open/close failure of the toner container, toner quantity lack, or toner aggregation

Step	Check description	Assumed cause	Measures	Reference
1	Checking the toner supply opening	The spring to open/close the toner shutter is caught up or deformed.	Open and close the toner supply open-ing manually to fix the operation.	
2	Checking the toner remaining amount	The agitating paddle in the toner container is warped or toner amount is low.	Check the toner remaining amount and replace the toner container if necessary.	
3	Reinstalling / replacing the toner container	The torque increases due to the toner condensation.	Shake the toner container enough and reinstall it. Or, replace it.	

(11)Abnormal sound from inside the machine

Dirt at the developer section, Foreign object adhesion or toner aggregation

Step	Check description	Assumed cause	Measures	Reference
1	Checking the toner supply opening	The spring for opening and closing of the toner supply opening is hooked with the other parts, or deformed.	Open and close the toner supply open-ing manually to fix the operation.	
2	Cleaning the developer unit	The shaft or the bushing of the developer roller is dirty or foreign objects are on them.	Check if the developer roller rotates. If not rotating smoothly, clean the shaft or the bushing of the developer roller.	

Step	Check description	Assumed cause	Measures	Reference
3	Replacing the developer unit	The torque inside the developer unit increased due to the toner condensation, etc.	Replace the developer unit.	

(12)Abnormal sound from inside the machine

Worn, dirt, foreign object adhesion or waste toner clogging at the drum section

Step	Check description	Assumed cause	Measures	Reference
1	Executing Drum refresh	Toner is not enough on the drum.	Execute Drum refresh.	
2	Checking the drum unit and the developer unit	The drum screw does not properly rotate.	Check if the drum screw rotates manually. Clean it if not smoothly rotated. If it is locked, replace the drum unit.	
3	Cleaning and applying the grease	Foreign objects adhere to the drum drive gear cogs or grease is in shortage.	Clean the tooth of the drum drive gear and apply the grease to them.	
4	Replacing the drum unit	The torque inside the drum unit increased due to the waste toner clogging, etc.	Replace the drum unit.	

(13)The driving sound is noisy during printing

Step	Check description	Assumed cause	Measures	Reference
1	Changing the settings	The Quiet Mode is off.	Press [Quiet] key to set quiet mode.	

(14)The rotation sound of the fan is noisy

Step	Check description	Assumed cause	Measures	Reference
1	Cleaning the fan motor	The blades of the fan motor are dirty.	Isolate the fan motor with the noisy sounds and clean the fans.	
2	Reattaching / replacing the fan motor	The fan motor is faulty.	Reattach the fan motor and reconnect the connector. If not repaired, replace the fan motor.	

7-7 Malfunction

No.	Contents	Condition
(1)	The main unit does not operate at all even if the power switch is turned on	
(2)	Toner drops over the paper conveying section.	(Final phenomenon: Toner adheres on the paper leading edge)
(3)	The login fails with other than the ID card	

Content of Malfunction

(1) The main unit does not operate at all even if the power switch is turned on

Step	Check description	Assumed cause	Measures	Reference
1	Measuring the input voltage	The power cord has no continuity.	Plug the power cord into another wall outlet.	
2	Checking the power cord	The power cord is faulty.	Check the continuity in the power cord, and replace the power cord if there is no continuity.	
3	Checking the power switch	The power switch is faulty.	Check the continuity between the contacts of the power switch. Then, replace the power switch if there is no continuity.	
4	Checking the connection	The connector is not properly connected or the wire is faulty.	Clean the terminal of the following wire connectors and reconnect the connectors. If there is no continuity, replace the wire. • Low voltage PWB (YC103) - Main/engine PWB (YC20)	
5	Replacing the low voltage PWB.	The low voltage PWB is faulty.	Replace the low voltage PWB.	
6	Replacing the main/engine PWB	The main/engine PWB is faulty.	Replace the main/engine PWB.	

(2) Toner drops over the paper conveying section.

(Final phenomenon: Toner adheres on the paper leading edge)

Step	Check description	Assumed cause	Measures	Reference
1	Cleaning the developer unit and drum unit	The developer unit or drum unit is dirty.	Clean the developer unit and drum unit.	
2	Replacing the developer unit	The toner is deteriorated.	Replace the developer unit.	

(3) The login fails with other than the ID card

Step	Check description	Assumed cause	Measures	Reference
1	Changing the settings	[User/Job Account] is valid while the card authentication kit is not installed.	• TSI model: Set [Card Setting] > [Keyboard Login] to [On] in the system menu. • LCD model: Set [Card Setting] > [Ten Key Login] to [On]in the system menu.	

8 PWBs

8-1 Description for PWB

(1) Main/Engine PWB

Connector position

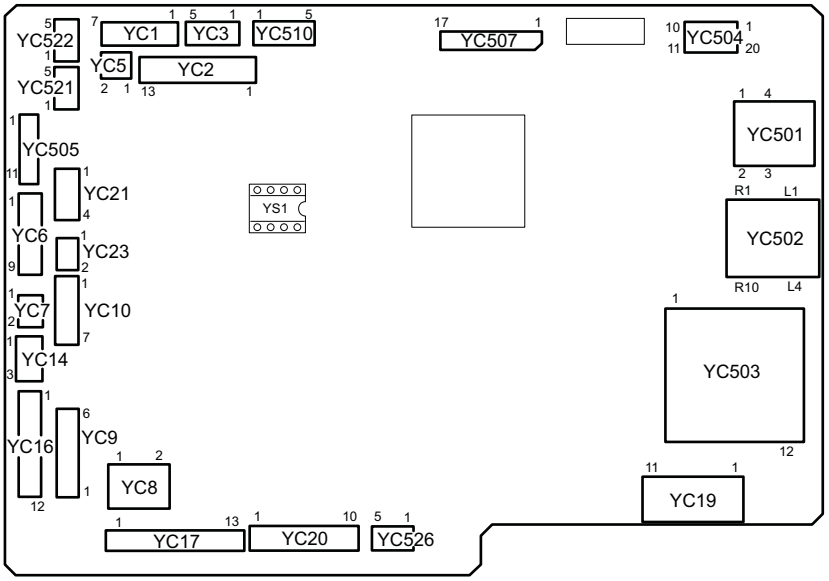

PWB photograph

Connector access point

YC1: In-machine temperature sensor, Fuser pressure release motor, In-machine fan motor, Eject solenoid
YC2: Temperature humidity sensor, Waste toner sensor, Thermopile
YC3: Polygon motor
YC5: Eraser
YC6: MP paper sensor, Paper sensor, Container relay PWB
YC7: Eject fan motor
YC8: Inter lock switch
YC9: Main motor
YC10: Developer clutch, Feed clutch, Registration clutch
YC14: Toner sensor
YC16: Registration sensor, High voltage PWB
YC17: PF-1100
YC19: Fuser pressure release sensor, Rotation detection sensor, Eject sensor, Fuser terminal thermistor
YC20: Low voltage power supply PWB
YC21: Wall motor and MP solenoid
YC23: Power switch
YC501: USB
YC502: EtherNet
YC503: SD
YC504: Wi-Fi
YC505: APC PWB
YC507: Operation panel PWB
YC510: USB PWB
YS1: EEPROM

Connec-tor	Pin	Signal	I/O	Voltage	Description
YC1	1	+24V6FA	-	24 V DC	24 V DC power source
	2	EXISOLRE	I	0/24 V DC	Eject solenoid drive
	3	PREMOTRE-	I/O	0/24 V DC	Pressure release motor drive
	4	PREMOTRE+	I/O	0/24 V DC	Pressure release motor drive
	5	FAN1MOTRE	I	0/24 V DC/ about12V	Left side fan drive
	6	+24V6FA(FAN)	-	24 V DC	24 V DC power (When fan stops, the out-put is turned off)
	7	GND	-	0 V DC	Ground
	8	INTTMP	I	Analog	In-machine temperature sensor output
YC2	1	HUMCLK	O	0/3.3 V DC(pulse)	Outside machine humidity sensor clock
	2	HUMDATA_	I	0/3.3 V DC(pulse)	Outside machine humidity sensor clock signal
	3	TMPDATA	I	Analog	Outside temperature sensor clock signal
	4	GND	-	0 V DC	Ground
	5	FUSTMPSE1O	I	Analog	Thermopile output 0
	6	GND	-	0 V DC	Ground
	7	+3.3V4LS	-	3.3 V DC	3.3 V DC power supply
	8	FUSTMPSE1A	I	Analog	Thermopile output A
	9	TPSDA	I/O	0/3.3 V DC(pulse)	Thermopile I2C communication data

Connec-tor	Pin	Signal	I/O	Voltage	Description
YC2	10	TPSCL	O	0/3.3 V DC(pulse)	Thermopile I2C communication clock
	11	GND	-	0 V DC	Ground
	12	WTOFULSE	I	0/3.3 V DC	Toner full detection signal
	13	+3.3V4LS	-	3.3 V DC	3.3 V DC power supply
YC3	1	+24V6FA	-	24 V DC	24 V DC power source
	2	GND	-	0 V DC	Ground
	3	PMOTREN	O	0/5 V DC	Polygon motor drive signal
	4	PMOTRDYN	I	0/3.3 V DC	Polygon motor rotation stability signal
	5	PMOTCLKN	O	0/5 V DC(pulse)	Polygon motor clock
YC5	1	GND	-	0 V DC	Ground
	2	+24V6ILFERA	-	24 V DC	24 V DC power (When the eraser is off, the output is turned off.)
YC6	1	+3.3V2LED	-	about1.2 V DC	Power for PI
	2	GND	-	0 V DC	Ground
	3	CASPAPSE	I	0/3.3 V DC	Cassette paper detection
	4	+3.3V2LED	-	about1.2 V DC	Power for PI
	5	GND	-	0 V DC	Ground
	6	MPFPAPSE	I	0/3.3 V DC	MPF paper detection
	7	GND	-	0 V DC	Ground
	8	CMDATA	I/O	0/3.3 V DC	Container communication
	9	-			
YC7	1	+24V6FA	-	24 V DC	24 V DC power source
	2	FAN2MOTRE	I	0/24 V DC	Right side fan drive
YC8	1	+24V0IL	-	24 V DC	24 V DC power (When the cover is opened, the output is turned off.)
	2	+24V0	-	24 V DC	24 V DC power source
YC9	1	MAIMOTDIR	O	0/5 V DC	Main motor rotaion's direction control signal
	2	MAIMOTRDYN	I	0/3.3 V DC	Main motor rotation stability signal
	3	MAIMOTCLKN	O	0/5 V DC(pulse)	Main motor clock
	4	MAIMOTREN	O	0/5 V DC	Main motor drive signal
	5	GND	-	0 V DC	Ground
	6	+24V6IL	-	24 V DC	24 V DC power (When the cover is opened, the output is turned off.)
YC10	1	+24V6FA	-	24 V DC	24 V DC power source
	2	REGCLURE	I	0/24 V DC	Registration clutch drive
	3	+24V6FA	-	24 V DC	24 V DC power source
	4	FEEDCLURE	I	0/24 V DC	Paper feed clutch drive
	5	+24V6FA	-	24 V DC	24 V DC power source

Connec-tor	Pin	Signal	I/O	Voltage	Description
YC10	6	DLPCLURE	I	0/24 V DC	Developer clutch drive
	7	-	-		Not use
YC14	1	+3.3V4LS	-	3.3 V DC	3.3 V DC power supply
	2	ITOEMPSE	I	0/3.3 V DC	Toner empty detection signal
	3	GND	-	0 V DC	Ground
YC16	1	PGND	-	0 V DC	Ground
	2	SGND	-	0 V DC	Ground
	3	+3.3V4LS	-	3.3 V DC	3.3 V DC power supply
	4	REGPAPSE	I	0/3.3 V DC	Registration sensor output
	5	MHVCNT	O	0/5 V DC(pulse)	High voltage(M) output 310uA/155uA switch
	6	HVCLK	O	0/5 V DC(pulse)	High voltage(D) output pulse
	7	RTHVREM	O	0/5 V DC	High voltage(M,T) output off/on
	8	GHVCNT	O	0/5 V DC(pulse)	High voltage (M) output constant voltage/ constant current switch, G terminal volt-age adjustment
	9	DHVCNT	O	0/5 V DC(pulse)	High voltage (D) output DC voltage adjustment
	10	THVCNT	O	0/5 V DC(pulse)	High voltage (T) output constant current off/on (output adjustment)
	11	+24V6ILF	-	24 V DC	24 V DC power (When the cover is opened, the output is turned off.)
	12	SHVCNT	O	Analog	High voltage (S) output off/on (output adjustment) : Japanese specification only
YC17	1	GND	-	0 V DC	Ground
	2	+3.3V4LSF	-	3.3 V DC	3.3 V DC power supply
	3	+3.3V2	-	3.3 V DC	3.3 V DC power supply
	4	PFINT	I	0/3.3 V DC	PF recovery factor detection
	5	PFRDY	I	0/3.3 V DC	PF ready signal
	6	PFSEL0	O	0/3.3 V DC	PF select 1 signal
	7	PFSEL1	O	0/3.3 V DC	PF select 2 signal
	8	PFCLK	O	0/3.3 V DC(pulse)	PF clock
	9	PFTXD	O	0/3.3 V DC(pulse)	PF data sending signal
	10	PFRXD	I	0/3.3 V DC(pulse)	PF data receiving signal
	11	+24V6FB	-	24 V DC	24 V DC power source
	12	+24V6FB	-	24 V DC	24 V DC power source
	13	GND	-	0 V DC	Ground

Connec-tor	Pin	Signal	I/O	Voltage	Description
YC19	1	+3.3V4LED	-	about1.2 V DC	Power for PI
	2	GND	-	0 V DC	Ground
	3	FUSROTSE	I	0/3.3 V DC(pulse)	Fuser rotation's detection signal
	4	+3.3V4LED	-	about1.2 V DC	Power for PI
	5	GND	-	0 V DC	Ground
	6	EXIPAPSE	I	0/3.3 V DC	Eject sensor signal
	7	+3.3V4LED	-	about1.2 V DC	Power for PI
	8	GND	-	0 V DC	Ground
	9	PREMOTPOSSE	I	0/3.3 V DC	Pressure release detection signal
	10	FUSTMPSE2	I	Analog	Fuser terminal thermistor signal
	11	GND	-	0 V DC	Ground
YC20	1	+24V0	-	24 V DC	24 V DC power source
	2	+24V0	-	24 V DC	24 V DC power source
	3	+24V0	-	24 V DC	24 V DC power source
	4	GND	-	0 V DC	Ground
	5	GND	-	0 V DC	Ground
	6	GND	-	0 V DC	Ground
	7	ZCROSS	I	0/3.3 V DC	Zero cross signal
	8	HEAT	O	0/3.3 V DC	Heater lighting signal
	9	STANDBYN	O	0/3.3 V DC	Sleep control signal
	10	RELAY	O	0/3.3 V DC	Relay control signal
YC21	1	GND	-	-	Ground
	2	WALMOTRE+	O	0/24 VDC	Wallmotor contorol signal
	3	+24V6FA	-	24 V DC	24 V DC power source
	4	MPFSOLRE	I	0/24 V DC	MPF solenoid drive
YC23	1	POWERSW	I	0/3.3 V DC	Power source switch signal
	2	GND	-	0 V DC	Ground
YC505	1	VDATA2N	O	LVDS	Image data signal
	2	VDATA2P	O	LVDS	Image data signal
	3	VDATA1N	O	LVDS	Image data signal
	4	VDATA1P	O	LVDS	Image data signal
	5	SAMPLE2	O	0/5 V DC	Sample signal
	6	SAMPLE1	O	0/5 V DC	Sample signal
	7	LSUENAN	O	0/5 V DC	Laser lighting signal
	8	SGND	-	0 V DC	Ground
	9	VCONT	O	Analog	Standard voltage
	10	PDN	I	0/5 V DC	Main scanning synchronization signal
	11	+5.0V4	-	5 V DC	5 V DC power

Connec-tor	Pin	Signal	I/O	Voltage	Description
YC507	1	+5.0V2	O	5 V DC	5 V DC power
	2	BUZZER	o	0/5 V DC	Buzzer control signal
	3	KEY1	I	0/3.3 VDC	KEY1 operation signal
	4	LED6	0	0/3.3 VDC	LED6 operation signal
	5	KEY2	I	0/3.3 VDC	KEY1 operation signal
	6	+3.3V2	O	3.3 V DC	3.3 V DC power
	7	LED8	0	0/3.3 VDC	LED6 operation signal
	8	GND	-	-	Ground
	9	LED5	0	0/3.3 VDC	LED6 operation signal
	10	KEY3	I	0/3.3 VDC	KEY1 operation signal
	11	LED4	0	0/3.3 VDC	LED6 operation signal
	12	KEY0	I	0/3.3 VDC	KEY1 operation signal
	13	LED0	0	0/3.3 VDC	LED6 operation signal
	14	LED7	0	0/3.3 VDC	LED6 operation signal
	15	LED1	0	0/3.3 VDC	LED6 operation signal
	16	LED3	0	0/3.3 VDC	LED6 operation signal
	17	LED2	0	0/3.3 VDC	LED6 operation signal
YC510	1	GND	-	0 V DC	Ground
	2	DATAP	I/O	LVDS	USB data signal
	3	DATAN	I/O	LVDS	USB data signal
	4	VBUS(+5.0V4)	-	5 V DC	5 V DC power
	5	FGND	-	0 V DC	Ground

(2) High voltage PWB

Connector position

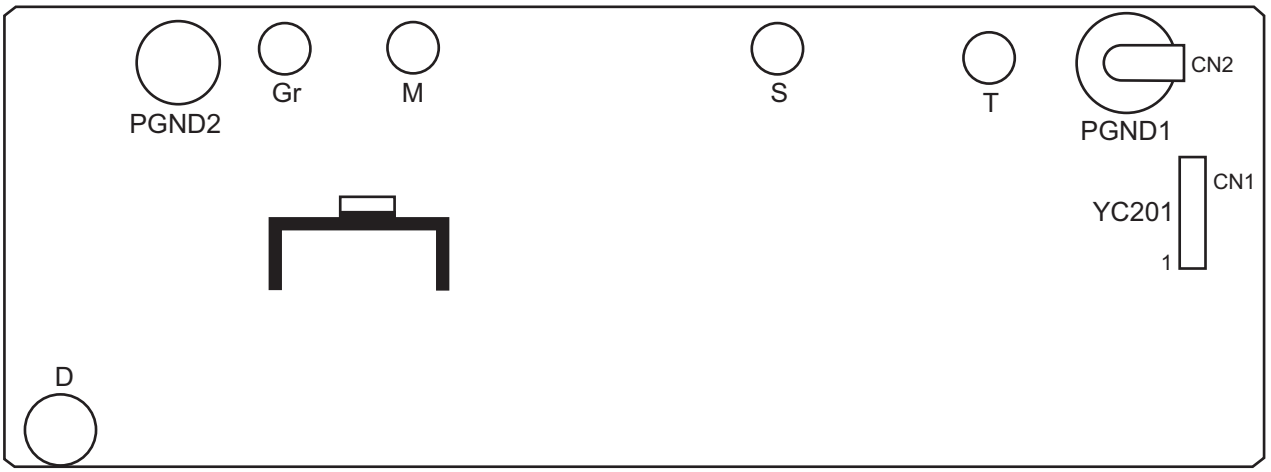

PWB photograph

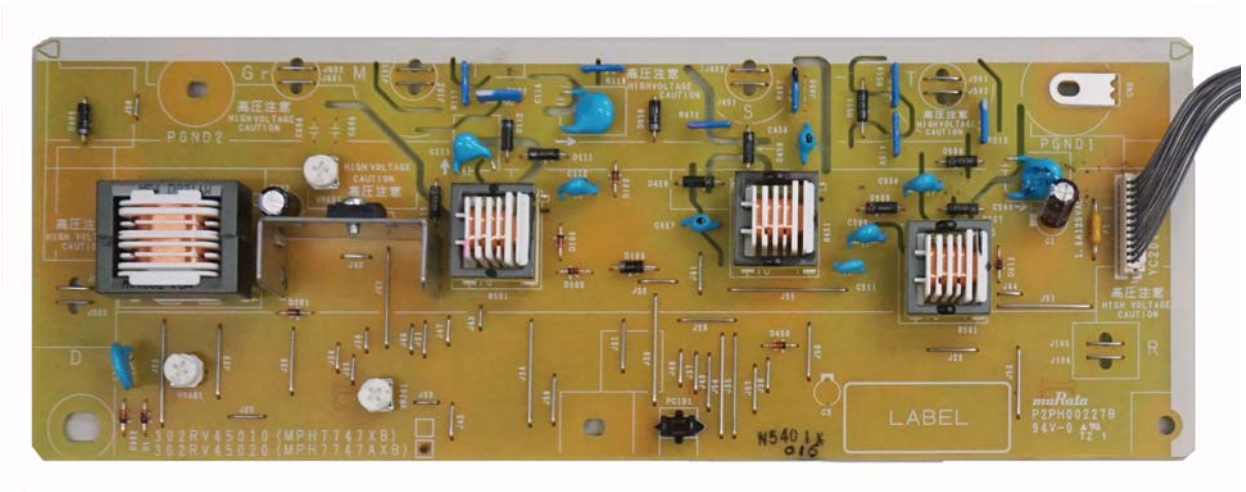

Connector access point

YC201: Main/Engine PWB

Connec-tor	Pin	Signal	I/O	Voltage	Description
YC201	1	SHVCNT	I	0 to 3.3 V DC(Analog)	High voltage (S) output off/on (output adjustment) : Japanese specification only
	2	+24V6ILF	-	24 V DC	Power source for high voltage
	3	THVCNT	I	0/5 V DC(pulse)	High voltage (T) output constant current off/on (output adjustment)
	4	DHVCNT	I	0/5 V DC(pulse)	High voltage (D) output DC voltage adjustment
	5	GHVCNT	I	0/5 V DC(pulse)	High voltage (M) output constant voltage/ constant current switch, G terminal volt-age adjustment
	6	RTHVREM	I	0/5 V DC	High voltage(M,T) output off/on
	7	HVCLK	I	0/5 V DC	High voltage(D) output pulse
	8	MHVCNT	I	0/5 V DC	High voltage(M) output 310uA/155uA switch
	9	REGPAPSE	O	0/3.3 V DC	Registration paper detection
	10	+3.3V4LS	-	3.3 V DC	Power for registration paper detection
	11	SGND	-	-	Ground for registration paper detection
	12	PGND	-	-	Ground for high voltage

(3) Low voltage power supply PWB

Connector position

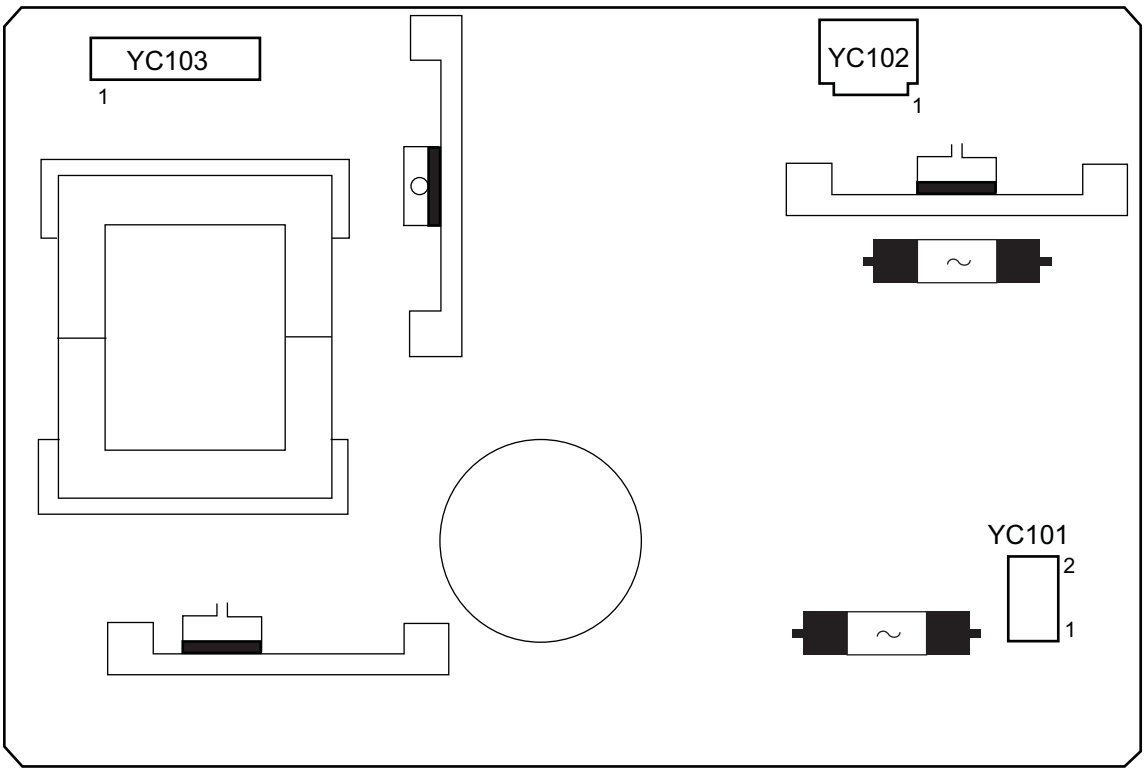

PWB photograph

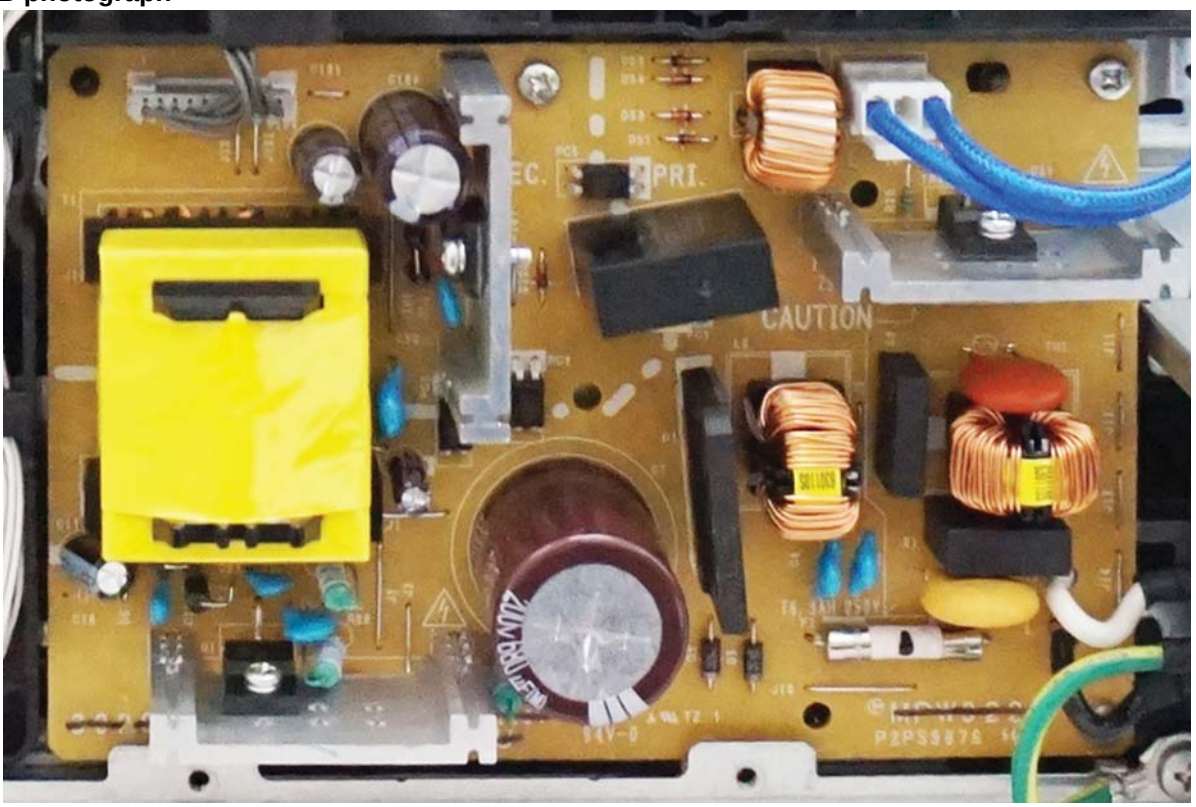

Connector access point

YC101: Inlet

YC102: Fuser heater, thermal cut-off

YC103: Main/Engine PWB

Connec-tor	Pin	Signal	I/O	Voltage	Description
YC101	1	L	-	AC power voltage	Commercial power connection
	2	N	-	AC power voltage	Commercial power connection
YC102	1	HEATERCOM	-	AC power voltage	Heater live side
	2	HEATERLIVE	-	AC power voltage	Heater neutral side
YC103	1	RELAY	I	0/3.3 V DC	Relay control signal
	2	STANDBYN	I	0/3.3 V DC	Sleep control signal
	3	HEAT	I	0/3.3 V DC	Heater lighting signal
	4	ZCROSS	O	0/3.3 V DC	Zero cross signal
	5	GND	-	0 V DC	Ground
	6	GND	-	0 V DC	Ground
	7	GND	-	0 V DC	Ground
	8	+24V0	-	8/24 V DC	24 V DC power (8V in off-mode)
	9	+24V0	-	8/24 V DC	24 V DC power (8V in off-mode)
	10	+24V0	-	8/24 V DC	24 V DC power (8V in off-mode)

(4) Operation panel PWB

Connector position

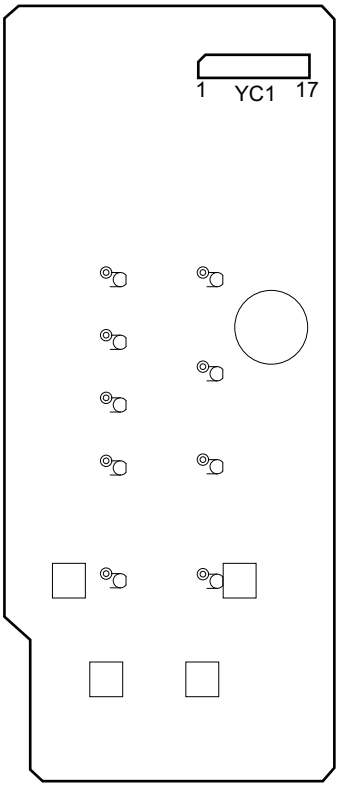

PWB photograph

Connector access point

YC1: Main/Engine PWB

Connec-tor	Pin	Signal	I/O	Voltage	Description
YC1	1	LED2	O	0/3.3 V DC	LED2 cathode
	2	LED3	O	0/3.3 V DC	LED3 cathode
	3	LED1	O	0/3.3 V DC	LED1 cathode
	4	LED7	O	0/3.3 V DC	LED7 cathode
	5	LED0	O	0/3.3 V DC	LED0 cathode
	6	KEY0	O	0/3.3 V DC	KEY0 signal
	7	LED4	O	0/3.3 V DC	LED4 cathode
	8	KEY3	O	0/3.3 V DC	KEY3 signal
	9	LED5	O	0/3.3 V DC	LED5 cathode
	10	GND	-	0 V DC	Ground
	11	LED8	O	0/3.3 V DC	LED8 cathode
	12	+3.3V2	-	3.3 V DC	3.3 V DC power supply
	13	KEY2	O	0/3.3 V DC	KEY2 signal
	14	LED6	O	0/3.3 V DC	LED6 cathode
	15	KEY1	O	0/3.3 V DC	KEY1 signal
	16	BUZZER	O	0/5 V DC(pulse)	buzzer
	17	+5V2	-	5 V DC	5 V DC power

(5) PF main PWB (option)

Connector position

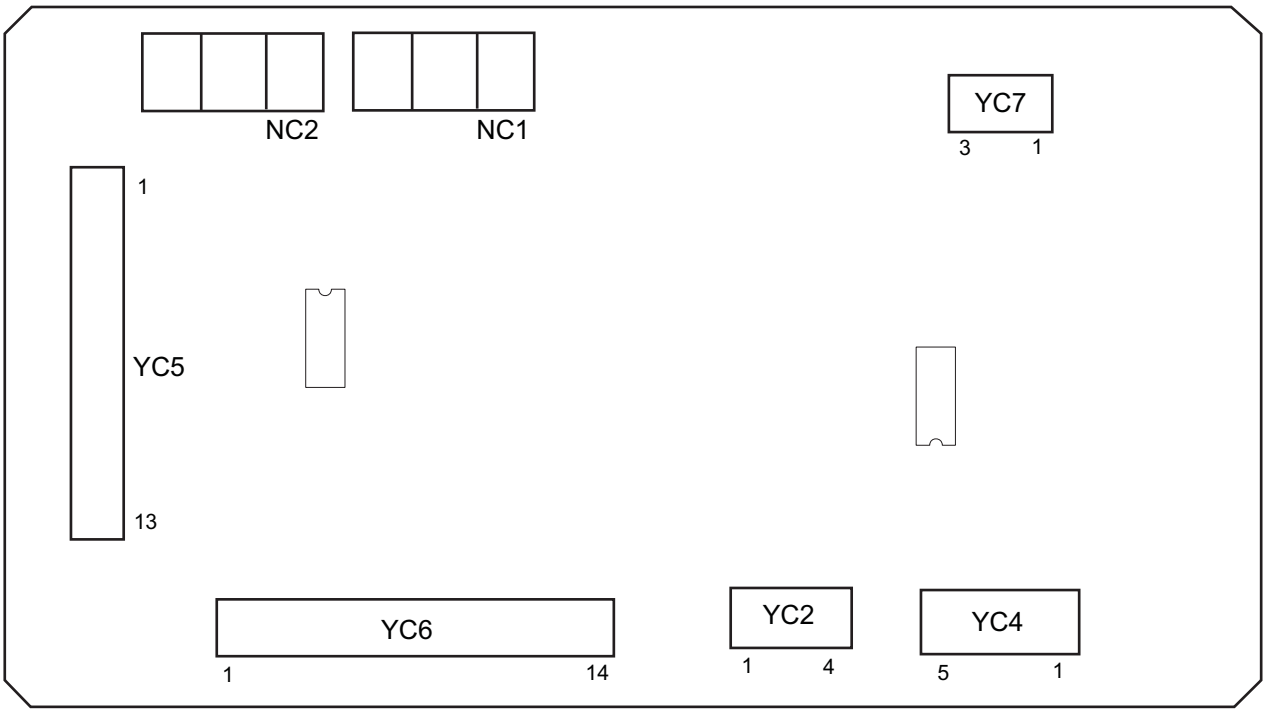

PWB photograph

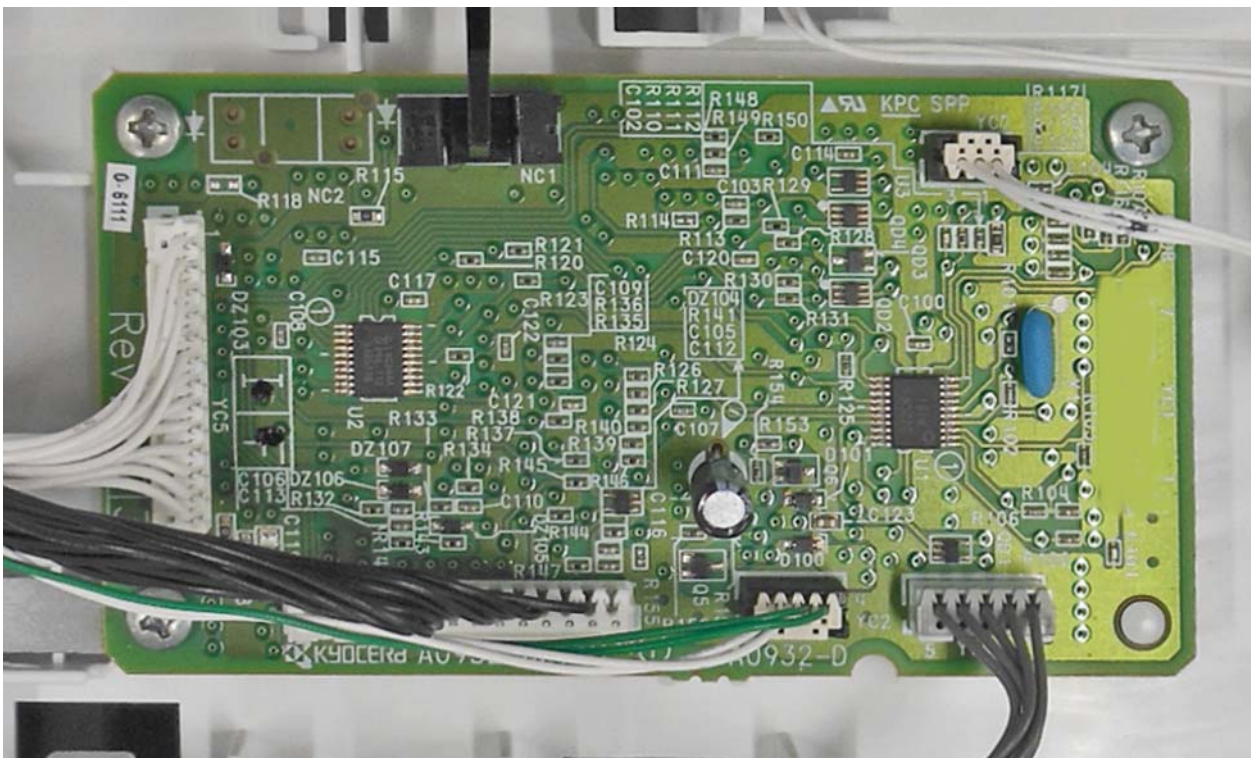

Connector access point

YC2: PF paper feed clutch, PF conveying clutch
YC4: PF conveying motor
YC5: Main/Engine PWB
YC6: PF main PWB (Lower cassette)
YC7: PF feed sensor

Connec-tor	Pin	Signal	I/O	Voltage	Description
YC2	1	+24V6FB	O	24 V DC	24 V DC power output
	2	FEEDCLN	O	0/24 V DC	Paper feed clutch signal
	3	+24V6FB	O	24 V DC	24 V DC power output
	4	TRNSCLN	O	0/24 V DC	Conveying clutch signal
YC4	1	TMOTRDYN	I	0/3.3 V DC	Motor rotation stability signal
	2	TMOTCLK	O	0/5 V DC(pulse)	motor rotation standard clock
	3	TMOTDRVN	O	0/5 V DC	motor rotation start/stop signal
	4	GND	O	-	Ground
	5	+24V6FB	O	24 V DC	24 V DC power output
YC5	1	GND	I	-	Ground
	2	+3.3V4LSF	I	3.3 V DC	3.3 V DC power input
	3	+3.3V2	I	3.3 V DC	3.3 V DC power input
	4	PFINT	O	0/3.3 V DC	Recovery factor signal
	5	PFRDY	O	0/3.3 V DC	Main PFRDY
	6	PFSEL0	I	0/3.3 V DC	PF select signal
	7	PFSEL1	I	0/3.3 V DC	PF select signal
	8	PFCLK	I	0/3.3 V DC(pulse)	Main PFCLK
	9	PFTXD	I	0/3.3 V DC	PF receiving data
	10	PFRXD	O	0/3.3 V DC(pulse)	PF receiving data
	11	+24V6FB	I	24 V DC	24 V DC power input
	12	+24V6FB	I	24 V DC	24 V DC power input
	13	GND	I	-	Ground
YC6	1	GND	O	-	Ground
	2	+3.3V4LSF	O	3.3 V DC	3.3 V DC power output
	3	+3.3V2	O	3.3 V DC	3.3 V DC power output
	4	PFINT	I	0/3.3 V DC	Recovery factor signal
	5	PFRDY	I	0/3.3 V DC	Main PFRDY
	6	PFSEL0	O	0/3.3 V DC	PF select signal
	7	PFSEL1	O	0/3.3 V DC	PF select signal
	8	PFCLK	O	0/3.3 V DC(pulse)	Main PFCLK
	9	PFTXD	O	0/3.3 V DC	PF receiving data
	10	PFRXD	I	0/3.3 V DC(pulse)	PF receiving data

Connec-tor	Pin	Signal	I/O	Voltage	Description
YC6	11	+24V6FB	O	24 V DC	24 V DC power output
	12	+24V6FB	O	24 V DC	24 V DC power output
	13	GND	O	-	Ground
	14	NC	-	-	Not used
YC7	1	+3.3V4LSF	O	3.3 V DC	3.3 V DC power output
	2	GND	O	-	Ground
	3	PFEED	I	0/3.3 V DC	Conveying paper timing sensor

9 Appendixes

9-1 Appendixes

(1) Repetitive defects gauge

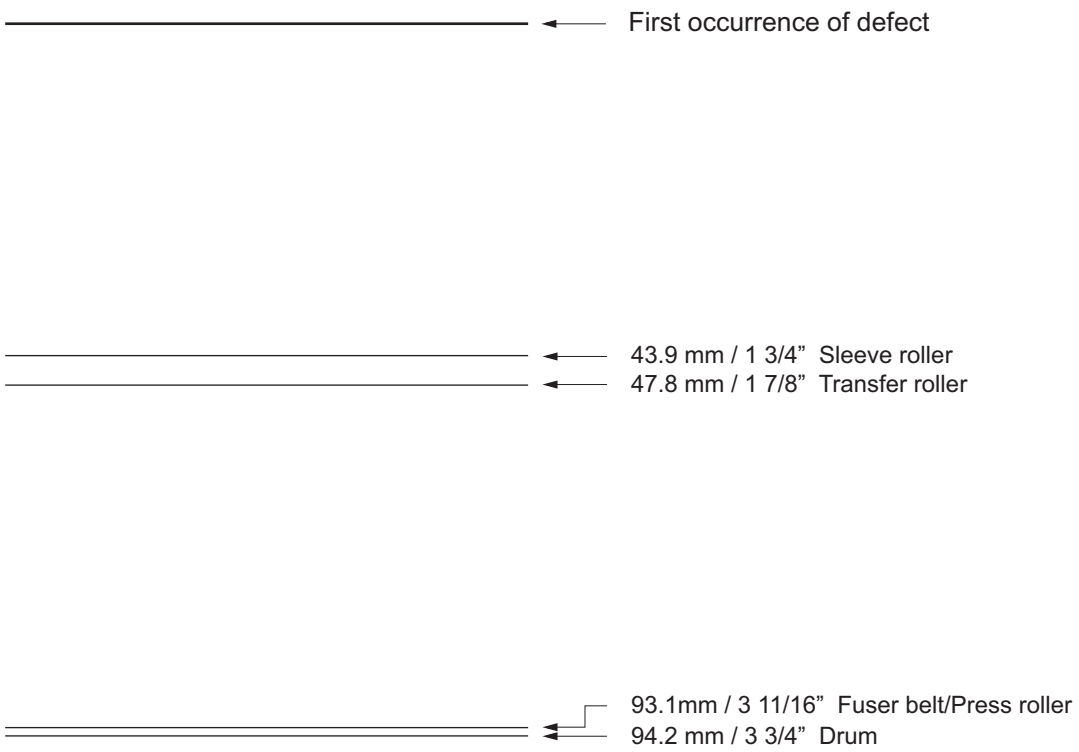

*: The repetitive marks interval may vary depending on operating conditions.

(2) Firmware environment commands

The printer maintains a number of printing parameters in its memory. These parameters may be changed permanently with the FRPO (Firmware RePrOgram) commands.
This section provides information on how to use the FRPO command and its parameters using examples.

Using FRPO commands for reprogramming the firmware

The current settings of the FRPO parameters are listed as the optional values on the service status page.

Note: Before changing any FRPO parameters, print out a service status page, so you will know the parameter-values before the changes are made. To return FRPO parameters to their factory default values, send the-FRPO INIT (FRPO-INITialize) command. (!R! FRPO INIT; EXIT;)

The FRPO command is sent to the printer in the following sequence:
!R! FRPO parameter, value; EXIT;
Example: Changing emulation mode to PC-PR201/65A
!R! FRPO P1, 6; EXIT;

FRPO parameters

Items	FRPO	Setting value	Factory setting
Message language selection at power-up	B7	0: Entering into the language selection menu 1: Not entering the language selection menu	1
Default pattern resolution	B8	0: 300 dpi 1: 600 dpi	0
Number of copies at start-up	C0	1 to 999	1
Page orientation	C1	0: Portrait 1: Landscape	0
Default font*	C2	Middle two digits of power-up font	0
	C3	Last two digits of power-up font	0
	C5	First two digits of power-up font	0
PCL font switching	C8	0:HP compatible mode 32:Compatibility mode	0
Total host buffer size	H8	0 to 99 in units of the size defined by FRPO S5	5
Form feed time-out value	H9	Value in units of 5 seconds (0 to 99).	6
Reduction (100 V model only)	J0	0: 100% 5: 70 % 6: 81 % 7: 86 % 8: 94 % 9: 98 %	0
Auto linefeed mode (100 V model only) (Japanese emulation only)	J7	0: Auto linefeed 1: No auto linefeed	0
Horizontal offset (100 V model only) *	K0	-7 to +7 (Integer), unit: cm	0
	K1	-99 to +99 (Decimal), unit: 1/100 cm	0

Items	FRPO	Setting value	Factory setting
Vertical offset (100 V model only)*	K2	-7 to +7 (Integer), unit: cm	0
	K3	-99 to +99 (Decimal), unit: 1/100 cm	0
Kanji font number setting (100 V model only)	K4	0: Same as V7 1: Mincho 40 dots 2: Gothic 40 dots 5: Mincho 48 dots 6: Gothic 48 dots	0
New/old JIS code switching (100 V model only)	K6	0: JIS X 0208: 1990 1: JIS X 0208: 1978 8: JIS X 0213: 2004	0
Duplex printing mode selection	N4	0: OFF 1: Long-edge mode (long-edge bind) 2: Short-edge mode (Short-edge bind)	0
Sleep timer time-out time	N5	1 to 240 minutes	1
Ecoprint level	N6	0: OFF 2: ON	0
Default emulation mode	P1	6 : PCL6 9 : KPDL	6
Carriage-return action	P2	0: Ignores 1: CR 2: CR+LF?	1
Linefeed action	P3	0: Ignores 1: LF 2: CR+LF?	1
KPDL auto switching	P4	0: None 1: Auto switching	0
AES option Page eject command and action when automatic emulation switching (AES) is triggered	P7	If the data is neither applicable to KPDL nor alternate emulation after the AES is started, it is processed in the alternate emulation . 0: All page eject commands 1: None 2: All page eject commands and Prescribe EXIT command 3: Prescribe EXIT command only 4: ^L command only 6: Prescribe EXIT command and ^L command If the data is neither applicable to KPDL nor alternate emulation after the AES is started, it is processed in KPDL. 10: Data other than KPDL print data is printed in the alternate emulation.	10
Command recognition character	P9	ASCII code of 33 to 126	82(R)

Items	FRPO	Setting value	Factory setting
Paper size(start-up)	R2	0: Size of the default paper cassette (See R4.) 1: Envelope Monarch 2: Envelope #10 3: Envelope DL 4: Envelope C5 5: Executive 6: Letter 7: Legal 8: ISO A4 9: JIS B5 13: ISO A5 14: ISO A6 15: JIS B6 16: Envelope #9 17: Envelope #6-3/4 18: ISO B5 19: Custom 20: B4 to A4(100 V model only) 21: A3 to A4(100 V model only) 22: A4 to A4[98%](100 V model only) 23: STK to A4(100 V model only) 31: Hagaki 32: Oufuku Hagaki 33: Oficio II 40: 16K 42: 8.5x13.5 50: Statement 51: Folio 52: Youkei type 2 53: Youkei type 4	0
Default paper source	R4	0: MP paper feed section 1: Cassette 1	1

Items	FRPO	Setting value	Factory setting
MP tray size	R7	1: Envelope Monarch 2: Envelope #10 3: Envelope DL 4: Envelope C5 5: Executive 6: Letter 7: Legal 8: ISO A4 9: JIS B5 13: ISO A5 14: ISO A6 15: JIS B6 16: Envelope #9 17: Envelope #6-3/4 18: ISO B5 19: Custom 31: Hagaki 32: Oufuku Hagaki 33: Oficio II 40: 16K 42: 8.5x13.5 50: Statement 51: Folio 52: Youkei type 2 53: Youkei type 4	8
A4/Letter override	S4	0: OFF 1: ON	1
Host buffer size rate (H8 value and integration)	S5	0: 10KB 1: 100KB 2: 1MB	1
RAM disk size (LCD model only)	S6	1 to 1024	400
RAM disk size (LCD model only)	S7	0: RAM disk mode OFF 1: RAM disk mode ON	1

Items	FRPO	Setting value	Factory setting
Tray1 size	T1	5: Executive 6: Letter 7: Legal 8: ISO A4 9: JIS B5 13: ISO A5 14: ISO A6 15: JIS B6 18: ISO B5 19: Custom 33: Oficio II 40: 16K 42: 8.5x13.5 50: Statement 51: Folio	8
Tray2 size	T2	5: Executive 6: Letter 7: Legal 8: ISO A4 9: JIS B5 13: ISO A5 14: ISO A6 15: JIS B6 18: ISO B5 19: Custom 33: Oficio II 40: 16K 42: 8.5x13.5 50: Statement 51: Folio	8
Wide A4	T6	0: OFF 1: ON	0
Line spacing	U0	Lines per inch (integer value)	6
	U1	Lines per inch (fraction value)	0
Character spacing	U2	Characters per inch (integer value)	10
	U3	Characters per inch (fraction value)	0

Items	FRPO	Setting value	Factory setting
Country code of the resident fonts	U6	0: US 1: France 2: Germany 3: U.K. 4: Denmark 5: Sweden 6: Italy 7: Spain 8: Japan 9: US legal 10: IBM PC-850 (Multi-lingual) 11: IBM PC-860 (Portuguese) 12: IBM PC-863 (Canadian French) 13: IBM PC-865 (Norwegian) 14: Norway 15: Denmark 2 16: Spain 2 17: Latin America	41
Supported symbol sets	U7	0: Same as the default emulation mode (P1) 1: IBM 6: PCL	53
Default font pitch*	U8	Default font pitch/integer	10
	U9	Default font pitch/decimal	0
ANK outline font size at start-up*	V0	Integer value of ANK outline font size at power-up Upper 2-digit/valid value: 00 to 09	0
	V1	Integer value of ANK outline font size at power-up Lower 2-digit/valid value: 00 to 99	12
	V2	Decimal value of ANK outline font size at power-up Valid value: 00, 25, 50, 75	0
ANK outline font name at start-up*	V3	ANK outline font name at power-up	Courier
Initial Kanji outline font side at start-up (100 V model only)*	V4	Upper 2-digit integer value of Kanji outline font size at start-up Valid value range: 00 to 09	0
	V5	2-digit integer value of the Kanji outline font size at start-up Valid value range: 00 to 99	10
	V6	2-digit decimal value of the Kanji outline font size at start-up Valid value: 00, 25, 50, 75	0
Initial Kanji outline font name (100 V model only)*	V7	Kanji outline font name at start-up	MTHSMIN-CHO-W3

Items	FRPO	Setting value	Factory setting
Default weight(courier and letter Gothic)	V9	0: Courier = darkness Letter Gothic = darkness 1: Courier = regular Letter Gothic = darkness 4: Courier = darkness Letter Gothic = regular 5: Courier = regular Letter Gothic = regular	5
Color mode	W1	0: BW 1: Color (CMYK color)	1
Gloss mode	W6	0: OFF 1: ON	0
Paper type for the MP tray	X0	1: Plain 2: Transparency 3: Preprinted 4: Labels 5: Bond 6: Recycled 7: Vellum 8: Rough (except 100 V model) 9: Letterhead 10: Color 11: Prepunched 12: Envelope 13: Hagaki 14: Coated 16: Thick 17: High quality 21 to 28 : Custom 1 to Custom 8	1
Paper type (Paper cassettes 1)	X1	1: Plain 3: Preprinted 5: Bond 6: Recycled 8: Rough (except 100 V model) 9: Letterhead 10: Color 11: Prepunched 16: Thick 17: High quality 21 to 28 : Custom 1 to Custom 8	1

Items	FRPO	Setting value	Factory setting
Paper type (Option paper cassette 2 to 5)	X2	1: Plain 3: Preprinted 5: Bond 6: Recycled 8: Rough (except 100 V model) 9: Letterhead 10: Color 11: Prepunched 16: Thick 17: High quality 21 to 28 : Custom 1 to Custom 8	1
Cassette selection mode (PCL)	X9	0: Paper selection depending on an escape sequence compatible with HP-LJ5Si 2: Paper selection depending on an escape sequence compatible with HP-LJ8000	0
Auto error clear at an error	Y0	0: OFF 1: ON	0
Auto error clear timeout time	Y1	Value in units of 5 seconds (0 to 99).	6
Paper error detection at duplex printing Paper size and type error detection at fixed paper source (LCD model only)	Y3	0: Not detected 33: Detected	0
Forced duplex printing setting (Media type is Preprinted, Prepunched and Letterhead only)	Y4	0: OFF 1: ON	0
PDF direct printing	Y5	0: Zoom depending on paper size 1: Loads paper which is the same size as the image 2: Loads Letter, A4 size paper depending on the image sizeEnlarges or reduces the image to fit in the current paper size 3: Loads Letter, A4 size paper depending on the image size 8: Printed in full magnification 9: Loads Letter, A4 size paper depending on the image size 10: Loads Letter, A4 size paper depending on the image sizeEnlarges or reduces the image to fit in the current paper size 13 to 99: Same action as default value(0)	0
Job box error control	Y6	0: No error control 1: Output the error list 2: Displays the error 3: Displays the error and prints the error report	3

*: Ignored depending on emulation

(3) Wiring diagram

(3-1)Standard

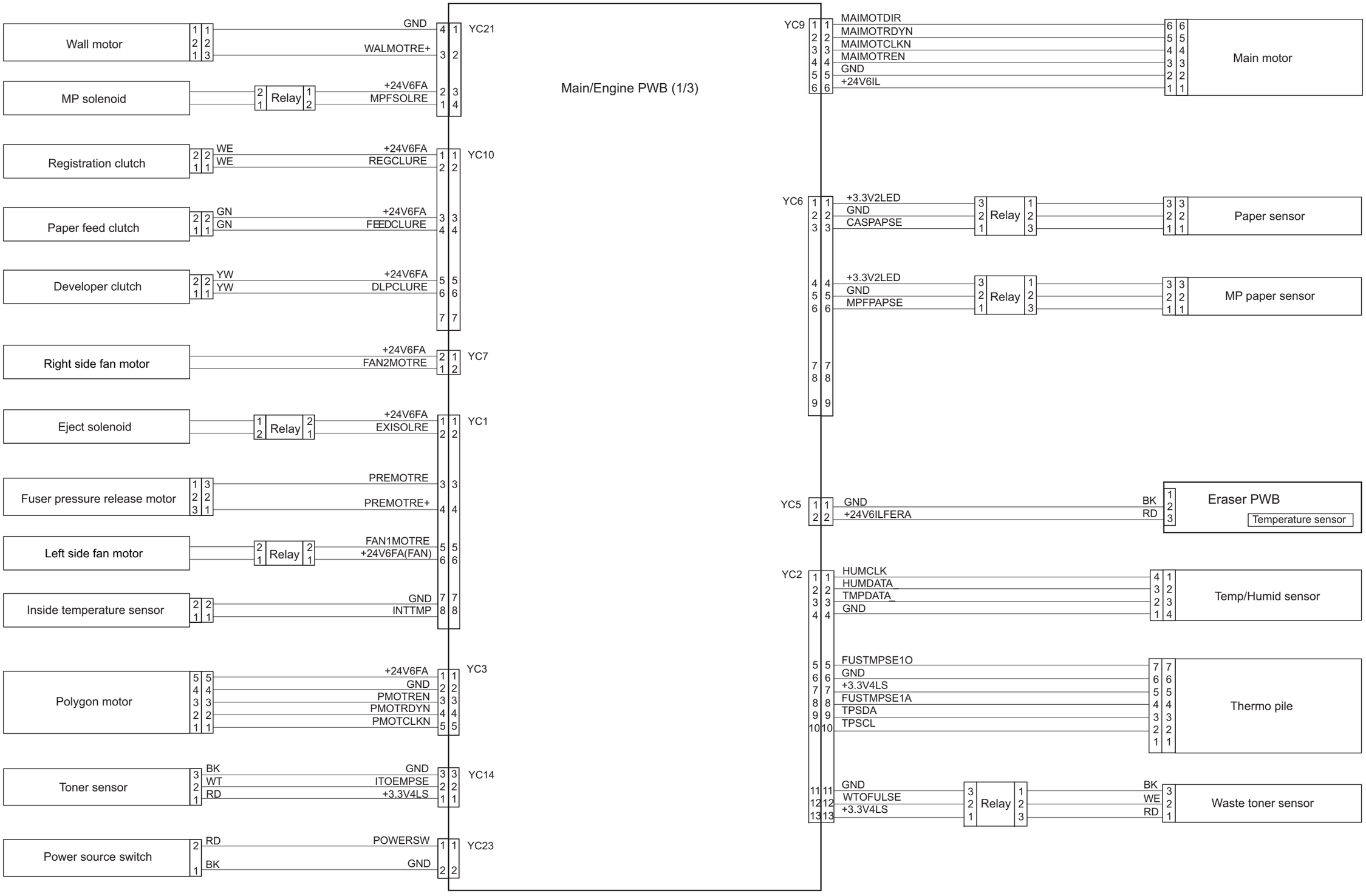

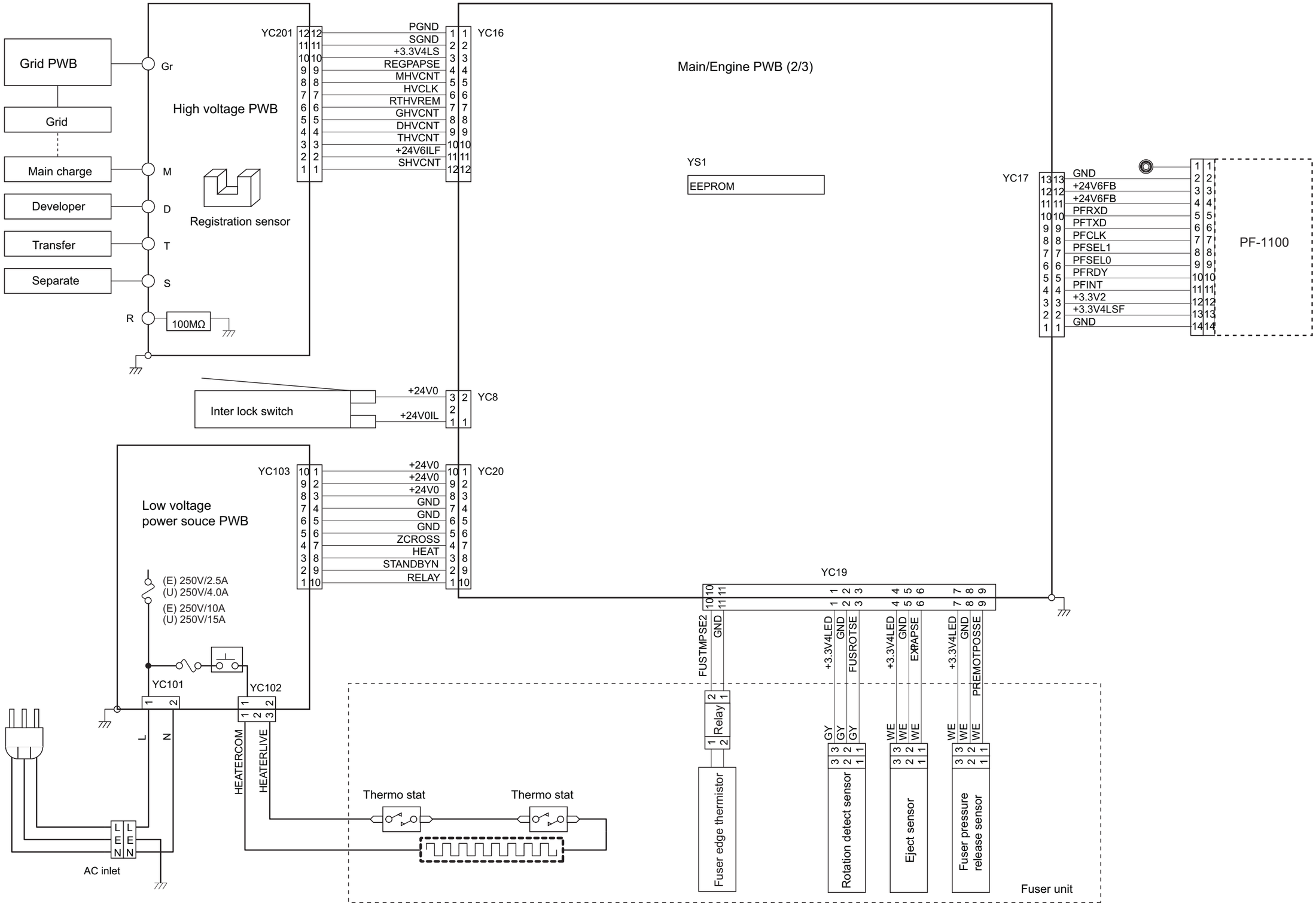
Grid PWB
Grid
Main charge
Developer
Transfer
Separate
Gr
M
D
T
S
R
100MΩ
High voltage PWB
Registration sensor
YC201
PGND
SGND
+3.3V4LS
REGPAPSE
MHVCNT
HVCLK
RTHVREM
GHVCNT
DHVCNT
THVCNT
+24V6ILF
SHVCNT
YC16
Main/Engine PWB (2/3)
YS1
EEPROM
YC17
GND
+24V6FB
+24V6FB
PFRXD
PFTXD
PFCLK
PFSEL1
PFSEL0
PFRDY
PFINT
+3.3V2
+3.3V4LSF
GND
PF-1100
Inter lock switch
+24V0
+24V0IL
YC8
YC103
+24V0
+24V0
+24V0
GND
GND
GND
ZCROSS
HEAT
STANDBYN
RELAY
YC20
Low voltage
power souce PWB
(E) 250V/2.5A
(U) 250V/4.0A
(E) 250V/10A
(U) 250V/15A
YC101
YC102
L
N
HEATERCOM
HEATERLIVE
AC inlet
YC19
FUSTMPSE2
GND
+3.3V4LED
GND
FUSROTSE
+3.3V4LED
GND
EXPAPSE
+3.3V4LED
GND
PREMOTPOSSE
Relay
Fuser edge thermistor
Rotation detect sensor
Eject sensor
Fuser pressure
release sensor
Thermo stat
Thermo stat
Fuser unit

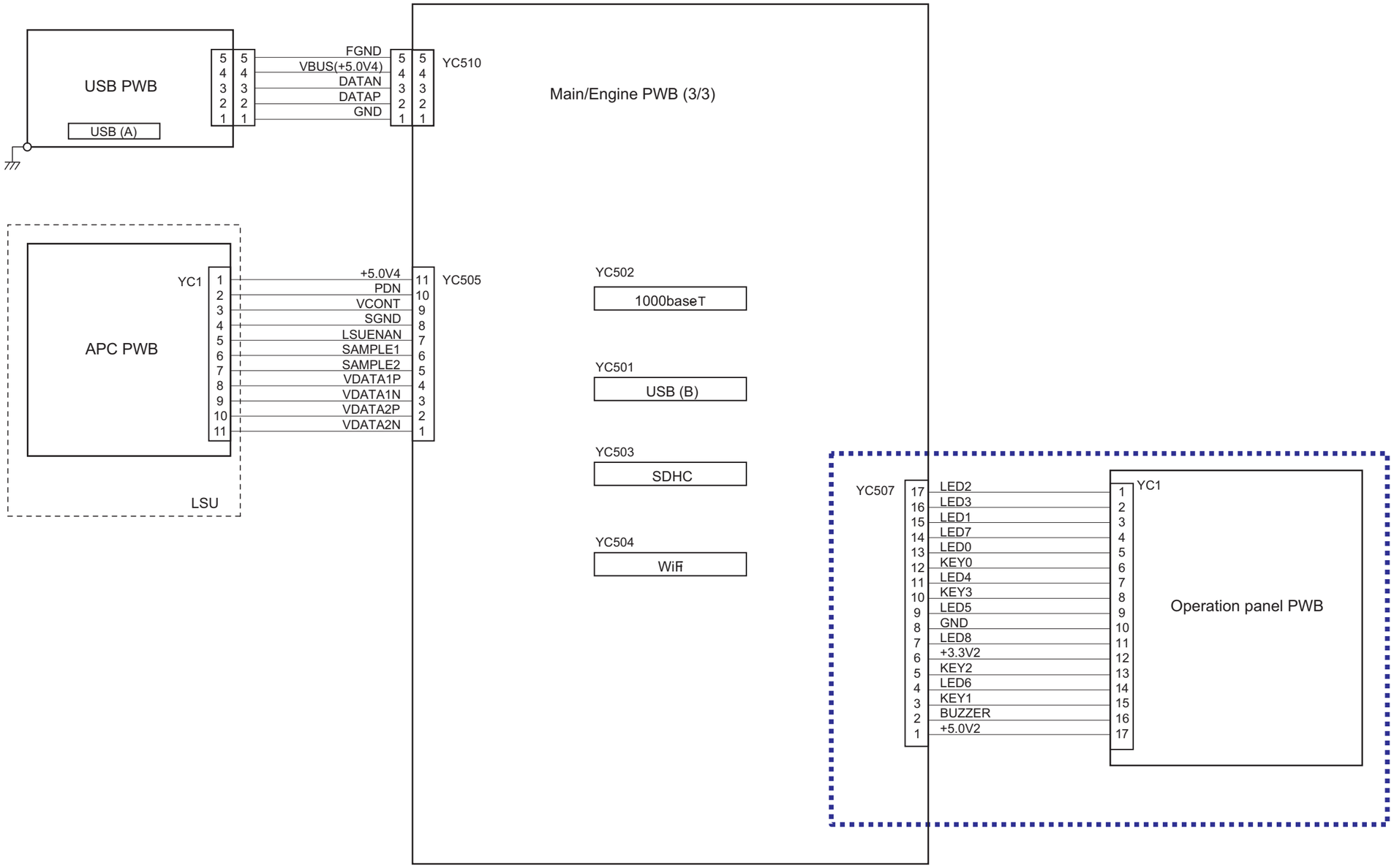
USB PWB
USB (A)
FGND
VBUS(+5.0V4)
DATAN
DATAP
GND
YC510
Main/Engine PWB (3/3)
APC PWB
YC1
LSU
+5.0V4
PDN
VCONT
SGND
LSUENAN
SAMPLE1
SAMPLE2
VDATA1P
VDATA1N
VDATA2P
VDATA2N
YC505
YC502
1000baseT
YC501
USB (B)
YC503
SDHC
YC504
WiFi
YC507
LED2
LED3
LED1
LED7
LED0
KEY0
LED4
KEY3
LED5
GND
LED8
+3.3V2
KEY2
LED6
KEY1
BUZZER
+5.0V2
YC1
Operation panel PWB

(3-2)PF-1100 (Options)

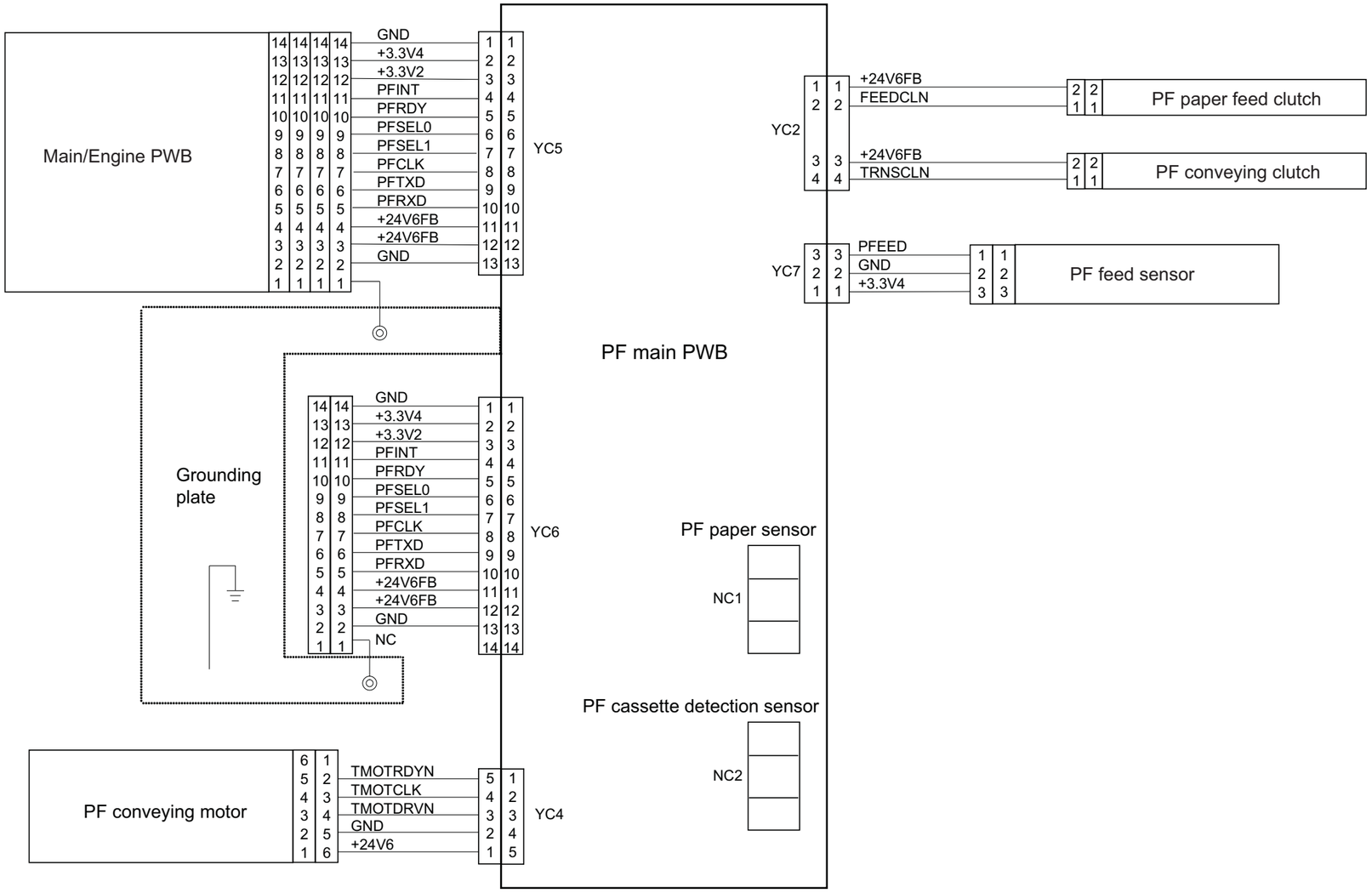

PF-1100

(250 sheets × 1 Paper Feeder)

Installation Guide

PF-1100

Installation Guide
Installationsanleitung
Guide d'installation
Guida all'installazione
Guía de instalación
Руководство по установке
安裝手冊
설치안내서
インストールガイド

Installation of PF-1100
Installation von PF-1100
Installation de PF-1100
Installazione di PF-1100
Instalación de PF-1100
Установка PF-1100
安裝PF-1100
PF-1100설치
PF-1100の設置

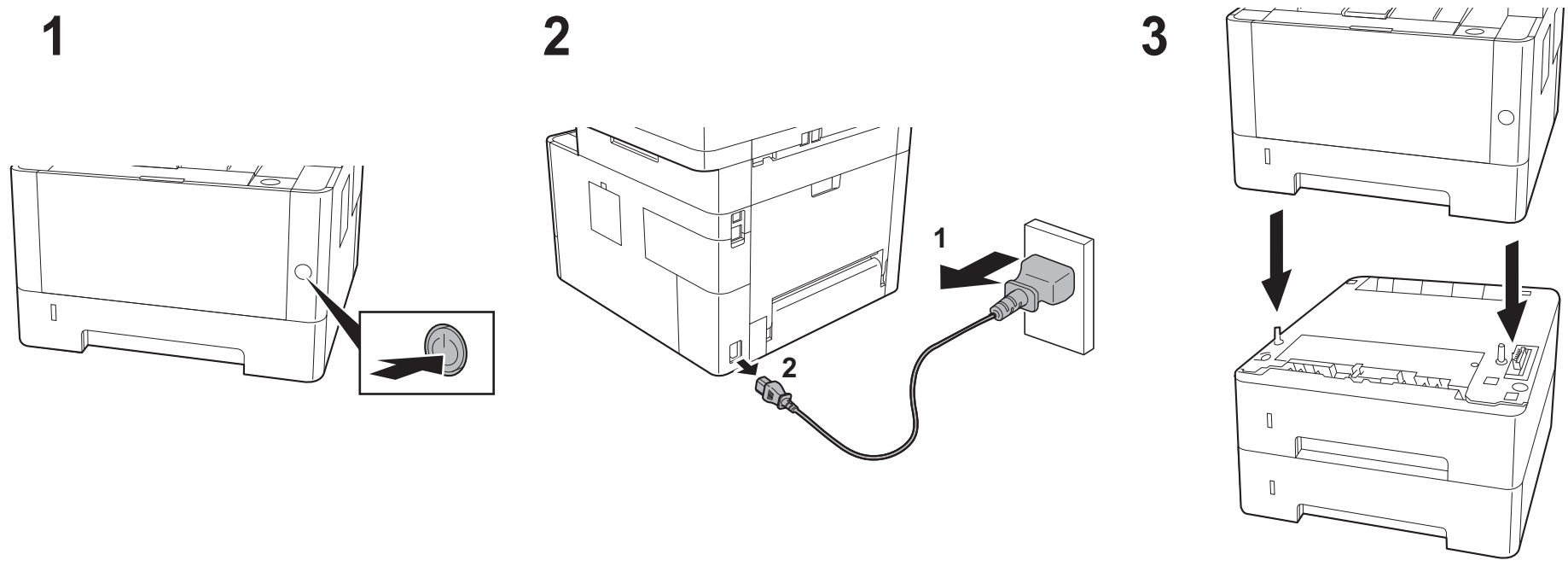

Loading paper
Ladenpapier
Papier de chargement
Carta da caricamento
Papel del cargamento
Загрузка бумаги
裝入紙張
용지 적재
用紙のセット

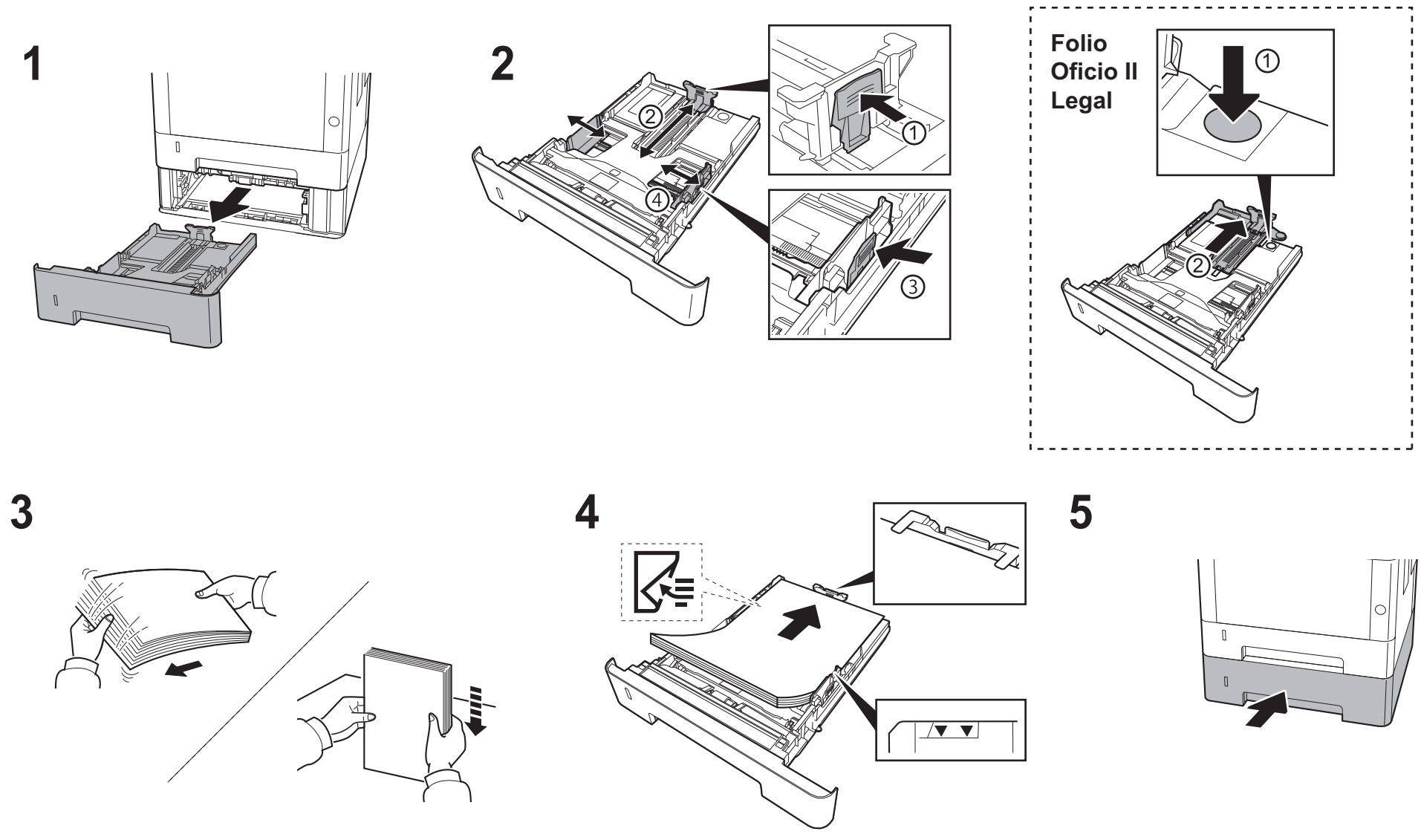

For Canada:
CAN ICES-3B/NMB-3B

303RA5614001
2016.6
303RA5614001

KYOCERA Document Solutions America, Inc.
Headquarters
225 Sand Road,
Fairfield, New Jersey 07004-0008, USA
Phone: +1-973-808-8444
Fax: +1-973-882-6000

Latin America
8240 NW 52nd Terrace Dawson Building, Suite 100
Miami, Florida 33166, USA
Phone: +1-305-421-6640
Fax: +1-305-421-6666

KYOCERA Document Solutions Canada, Ltd.
6120 Kestrel Rd., Mississauga, ON L5T 1S8,
Canada
Phone: +1-905-670-4425
Fax: +1-905-670-8116

KYOCERA Document Solutions
Mexico, S.A. de C.V.
Calle Arquimedes No. 130, 4 Piso, Colonia Polanco
Chapultepec, Delegacion Miguel Hidalgo,
Distrito Federal, C.P. 11560, México
Phone: +52-555-383-2741
Fax: +52-555-383-7804

KYOCERA Document Solutions Brazil, Ltda.
Alameda África, 545, Pólo Empresarial Consbrás,
Tamboré, Santana de Parnaíba, State of São Paulo, CEP
06543-306, Brazil
Phone: +55-11-2424-5353
Fax: +55-11-2424-5304

KYOCERA Document Solutions Chile SpA
Jose Ananias 505, Macul. Santiago, Chile
Phone: +562-2350-7000
Fax: +562-2350-7150

KYOCERA Document Solutions
Australia Pty. Ltd.
Level 3, 6-10 Talavera Road North Ryde N.S.W, 2113,
Australia
Phone: +61-2-9888-9999
Fax: +61-2-9888-9588

KYOCERA Document Solutions
New Zealand Ltd.
Ground Floor, 19 Byron Avenue, Takapuna, Auckland,
New Zealand
Phone: +64-9-415-4517
Fax: +64-9-415-4597

KYOCERA Document Solutions Asia Limited
13/F.,Mita Centre, 552-566, Castle Peak Road Ts*u*en Wan,
New Territories, Hong Kong
Phone: +852-2496-5678
Fax: +852-2610-2063

KYOCERA Document Solutions
(China) Corporation
8F, No. 288 Nanjing Road West, Huangpu District,
Shanghai,200003, China
Phone: +86-21-5301-1777
Fax: +86-21-5302-8300

KYOCERA Document Solutions
(Thailand) Corp., Ltd.
335 Ratchadapisek Road, Wongsawang, Bangsue,
Bangkok 10800,
Thailand
Phone: +66-2-586-0333
Fax: +66-2-586-0278

KYOCERA Document Solutions
Singapore Pte. Ltd.
12 Tai Seng Street #04-01A,
Luxasia Building, Singapore 534118
Phone: +65-6741-8733
Fax: +65-6748-3788

KYOCERA Document Solutions
Hong Kong Limited
16/F.,Mita Centre, 552-566, Castle Peak Road Tsuen Wan,
New Territories, Hong Kong
Phone: +852-3582-4000
Fax: +852-3185-1399

KYOCERA Document Solutions
Taiwan Corporation
6F., No.37, Sec. 3, Minquan E. Rd.,
Zhongshan Dist., Taipei 104, Taiwan R.O.C.
Phone: +886-2-2507-6709
Fax: +886-2-2507-8432

KYOCERA Document Solutions Korea Co., Ltd.
#10F Daewoo Foundation Bldg 18, Toegye-ro, Jung-gu,
Seoul, Korea
Phone: +822-6933-4050
Fax: +822-747-0084

KYOCERA Document Solutions
India Private Limited
Second Floor, Centrum Plaza, Golf Course Road,
Sector-53, Gurgaon, Haryana 122002, India
Phone: +91-0124-4671000
Fax: +91-0124-4671001

KYOCERA Document Solutions Europe B.V.
Bloemlaan 4, 2132 NP Hoofddorp,
The Netherlands
Phone: +31-20-654-0000
Fax: +31-20-653-1256

KYOCERA Document Solutions Nederland B.V.
Beechavenue 25, 1119 RA Schiphol-Rijk,
The Netherlands
Phone: +31-20-5877200
Fax: +31-20-5877260

KYOCERA Document Solutions (U.K.) Limited
Eldon Court, 75-77 London Road,
Reading, Berkshire RG1 5BS,
United Kingdom
Phone: +44-118-931-1500
Fax: +44-118-931-1108

KYOCERA Document Solutions Italia S.p.A.
Via Monfalcone 15, 20132, Milano, Italy,
Phone: +39-02-921791
Fax: +39-02-92179-600

KYOCERA Document Solutions Belgium N.V.
Sint-Martinusweg 199-201 1930 Zaventem,
Belgium
Phone: +32-2-7209270
Fax: +32-2-7208748

KYOCERA Document Solutions France S.A.S.
Espace Technologique de St Aubin
Route de l'Orme 91195 Gif-sur-Yvette CEDEX,
France
Phone: +33-1-69852600
Fax: +33-1-69853409

KYOCERA Document Solutions Espana, S.A.
Edificio Kyocera, Avda. de Manacor No.2,
28290 Las Matas (Madrid), Spain
Phone: +34-91-6318392
Fax: +34-91-6318219

KYOCERA Document Solutions Finland Oy
Atomitie 5C, 00370 Helsinki,
Finland
Phone: +358-9-47805200
Fax: +358-9-47805212

KYOCERA Document Solutions Europe B.V., Amsterdam (NL) Zürich Branch
Hohlstrasse 614, 8048 Zürich,
Switzerland
Phone: +41-44-9084949
Fax: +41-44-9084950

KYOCERA Bilgitas Document Solutions Turkey A.S.
Altunizade Mah. Prof. Fahrettin Kerim Gökay Cad. No:45
34662 ÜSKÜDAR İSTANBUL, TURKEY
Phone: +90-216-339-0020
Fax: +90-216-339-0070

KYOCERA Document Solutions Deutschland GmbH
Otto-Hahn-Strasse 12, 40670 Meerbusch,
Germany
Phone: +49-2159-9180
Fax: +49-2159-918100

KYOCERA Document Solutions Austria GmbH
Wienerbergstraße 11, Turm A, 18. OG, 1100 Wien,
Austria
Phone: +43-1-863380
Fax: +43-1-86338-400

KYOCERA Document Solutions Nordic AB
Esbogatan 16B 164 75 Kista, Sweden
Phone: +46-8-546-550-00
Fax: +46-8-546-550-10

KYOCERA Document Solutions Norge Nuf
Olaf Helsetsv. 6, 0619 Oslo, Norway
Phone: +47-22-62-73-00
Fax: +47-22-62-72-00

KYOCERA Document Solutions Danmark A/S
Ejby Industrivej 60, DK-2600 Glostrup,
Denmark
Phone: +45-70223880
Fax: +45-45765850

KYOCERA Document Solutions Portugal Lda.
Rua do Centro Cultural, 41 (Alvalade) 1700-106 Lisboa,
Portugal
Phone: +351-21-843-6780
Fax: +351-21-849-3312

KYOCERA Document Solutions South Africa (Pty) Ltd.
KYOCERA House, Hertford Office Park,
90 Bekker Road (Cnr. Allandale), Midrand, South Africa
Phone: +27-11-540-2600
Fax: +27-11-466-3050

KYOCERA Document Solutions Russia LLC.
Building 2, 51/4, Schepkina St., 129110, Moscow,
Russia
Phone: +7(495)741-0004
Fax: +7(495)741-0018

KYOCERA Document Solutions Middle East
Dubai Internet City, Bldg. 17,
Office 157 P.O. Box 500817, Dubai,
United Arab Emirates
Phone: +971-04-433-0412

KYOCERA Document Solutions Inc.
2-28, 1-chome, Tamatsukuri, Chuo-ku
Osaka 540-8585, Japan
Phone: +81-6-6764-3555
http://www.kyoceradocumentsolutions.com